1.0 INTRODUCTION

This specification covers the application requirements of Measurement Specialties Accelerometer ACH-04-08-05. The accelerometer contains three piezoelectric sensing elements oriented to simultaneously measure acceleration in three orthogonal, linear axes. Internal JFET's provide for a low impedance, buffered output with a wide variety of possible, application specific, signal conditioning circuitry. The sensor responds over a broad frequency range, from below 0.5Hz to above 5kHz, as a result of the integrated electronics and the damped sensing elements.

The ACH-04-08-05 accelerometer can be used in a wide range of applications including motional measurement and control systems, speaker feedback systems, vibration switches, shipment monitor and material handling systems, security systems, computer input/output devices, and data loggers. The device is not IR reflow solderable.

Features of the accelerometer include:

- Fully Contained 3-Axis Accelerometer
- Low Frequency Response
- High Resonant Frequency & Low Q
- Excellent Linearity
- Three Simultaneous Analog Outputs
- Low-Impedance Output
- Ultra-Low Power
- Low Cost

Pinout

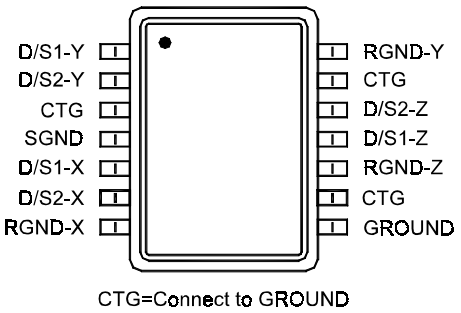

CTG=Connect to GROUND

Sensitive Axes

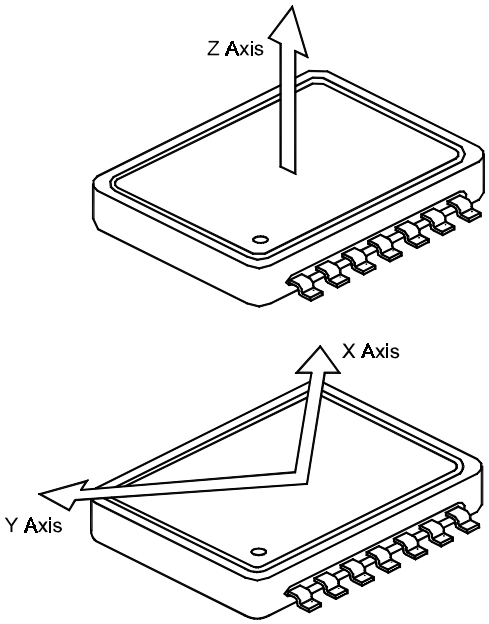

2.0 REFERENCE MATERIALS

2.1 Revision Summary

This paragraph is reserved for a revision summary of changes and additions made to this specification. Revision A changes include: document format, improved transverse sensitivity, interface circuit corrections, Analog Test PCB Kit description, and additional performance curves.

©Copyright 1996 by MSI. All International Rights Reserved.

INFORMATIONAL NOTES AND DISCLAIMER

For drawings, technical data or samples, call 610-650-1500
Specifications subject to change. Consult MSI for latest specifications.

2.2 Customer Assistance

Reference MSI Part Number 1003800-5 and call (610) 650-1500 in the USA or +49 6074 862 822 in Europe to obtain additional product information.

2.3 Drawings

MSI Customer Drawings are available for specific products. The information contained in Customer Drawings takes priority if there is a conflict with this specification or with any other technical document supplied by MSI.

2.4 Absolute Maximum Ratings

CHARACTERISTICS	VALUE	UNITS
Applied Voltage (V_{DD} with respect to GND)	+28	V
Package Power Dissipation	100	mW
ESD (Mil-Std-883, Method 3015.6)	2000	V

2.5 Pin Descriptions

PIN NUMBER	NAME	DESCRIPTION
1	D/S1-Y	Y-Axis JFET Drain or Source
2	D/S2-Y	Y-Axis JFET Source or Drain
3	CTG	Connect to GND
4	SGND	Sensor Common
5	D/S1-X	X-Axis JFET Drain or Source
6	D/S2-X	X-Axis JFET Source or Drain
7	RGND-X	Resistor GND for the X-Axis
8	GND	Device power - negative voltage with respect to V_{DD}
9	CTG	Connect to GND
10	RGND-Z	Resistor GND for the Z-Axis
11	D/S1-Z	Z-Axis JFET Drain or Source
12	D/S2-Z	Z-Axis JFET Source or Drain
13	CTG	Connect to GND
14	RGND-Y	Resistor GND for the Y-Axis

Note: JFET is symmetrical. The DRAIN and SOURCE are interchangeable.

2.6 Environmental Characteristics

CHARACTERISTICS (T=25°C)	SYMBOL	MIN	TYP	MAX	UNITS
Operating Temperature †	T_{OP}	-40	-	+85	°C
Storage Temperature	T_S	-40	-	+105	°C
Relative Humidity ‡	RH	0	-	95	%R.H.
Maximum Shock (Any Axis)	S_{MAX}	1,000	-	-	g

† Nominal sensitivity will typically change less than ±15% over temperature range. ‡ Humidity must be non-condensing.

Printed in U.S.A. For drawings, technical data or samples, contact call 610-650-1500.
Specifications subject to change. Consult MSI for latest specifications.

2.7 Specification

CHARACTERISTIC (T=25°C) ●	SYMBOL	MIN	TYP	MAX	UNITS
X Axis Sensitivity ■ ▲	M_X	1.07	1.80	-	mV/g
Y Axis Sensitivity ■ ▲	M_Y	1.07	1.80	-	mV\g
Z Axis Sensitivity ■ ▲	M_Z	1.07	1.35	-	mV/g
Lower Frequency Limit (3dB Point)	f_{L3dB}	-	0.35	0.7	Hz
Upper Frequency Limit (3dB Point)	f_{U3dB}	4,000	5,000	-	Hz
Resonant Frequency	f_o	-	9,200	-	Hz
Resonant Q	Q_R	-	10	-	Hz/Hz
Transverse Sensitivity	M_T	-	10	-	%
Base Strain Sensitivity	-	-	0.05	-	g/με
Temperature Transient Sensitivity	-	-	0.2	-	g/°C/min
Dynamic Range	-	-	±250	-	g's
Linearity	-	-	0.1	1.0	%
Equivalent Noise (100Hz)	e_{100}	-	0.2	-	mg/√Hz
Weight	-	-	0.35	-	grams

● Reference Frequency is 10 Hz.
■ Assumes constant current bias, guarded Drain & Source
▲ Tighter sensitivity tolerances available. Consult factory for options.

2.8 Electrical Specifications

CHARACTERISTICS (T=25°C) ✦	SYMBOL	MIN	TYP	MAX	UNITS
Gate-Drain Voltage	-	-30	-	-	V
Gate-Source Voltage	-	-30	-	-	V
Gate Current	-	-	-	10	mA
Power Dissipation	-	-	-	360	mW
Power Derating	-	-	3.27	-	mW/ºC
Gate-Source Cut-Off Voltage	$V_{GS(OFF)}$	-0.5	-	-1.8	V
Saturation Drain Current ✣	I_{DSS}	10	-	150	µA
CS Forward Transconductance ✣	g_{FS}	50	-	210	µS

✦ JFET's similar to 2N4117. Three per unit.
✣ Specifications modified from standard 2N4117 JFET's.

Printed in U.S.A. For drawings, technical data or samples, contact call 610-650-1500.
Specifications subject to change. Consult MSI for latest specifications.

2.9.1 Equivalent Electrical Schematic

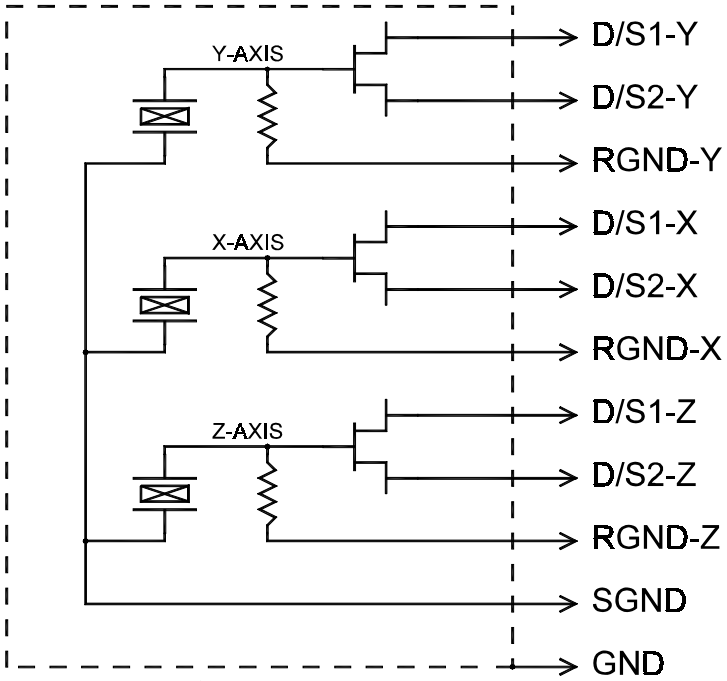

NOTES: 1. JFET SIMILAR TO 2N4117.
2. CONDUCTIVE CASE CONNECTED TO GND.

2.9.2 Interface Test Circuit (One Channel Shown)

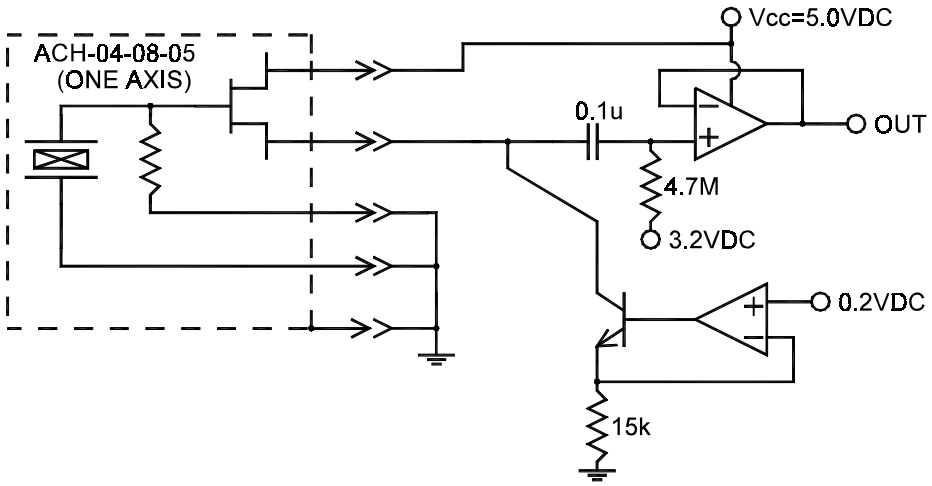

Printed in U.S.A. For drawings, technical data or samples, contact call 610-650-1500.
Specifications subject to change. Consult MSI for latest specifications.

2.9.3 Typical Amplitude Response versus Frequency

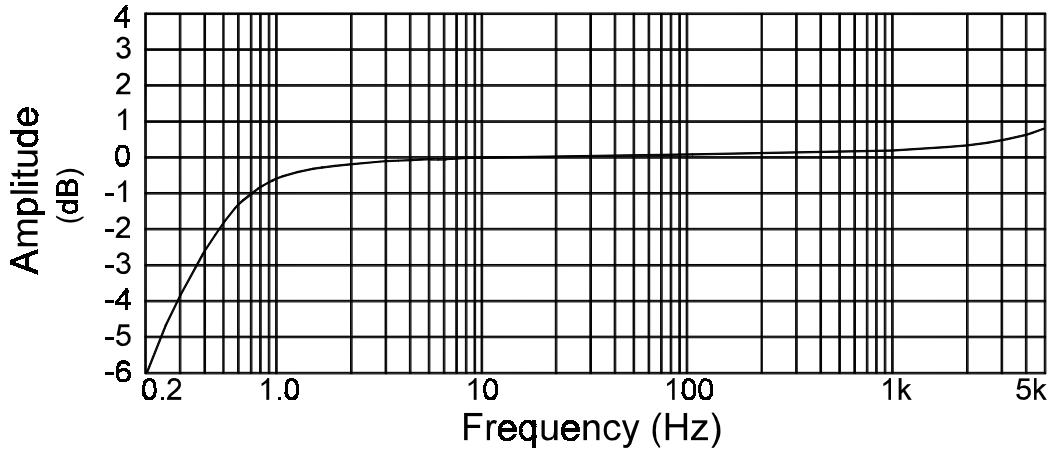

2.9.4 Typical Phase Response versus Frequency

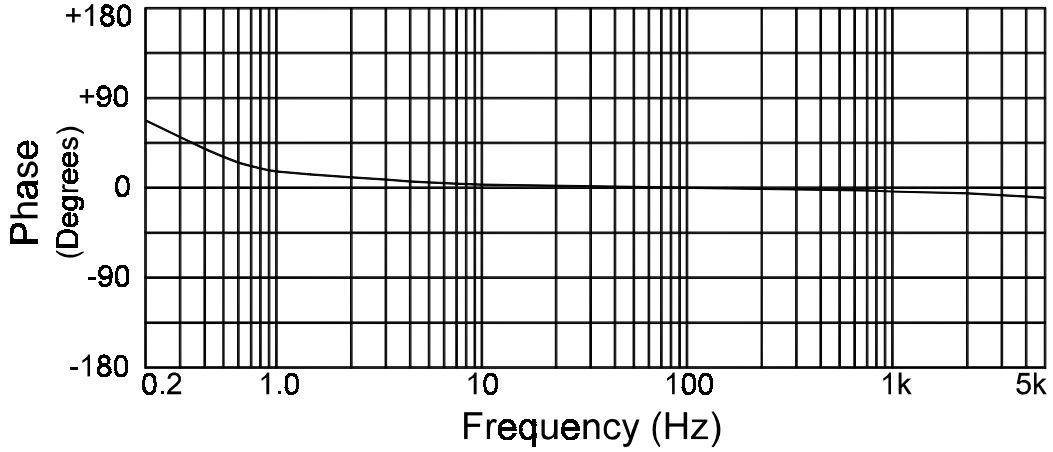

2.9.5 Typical Sensitivity Variation versus Temperature

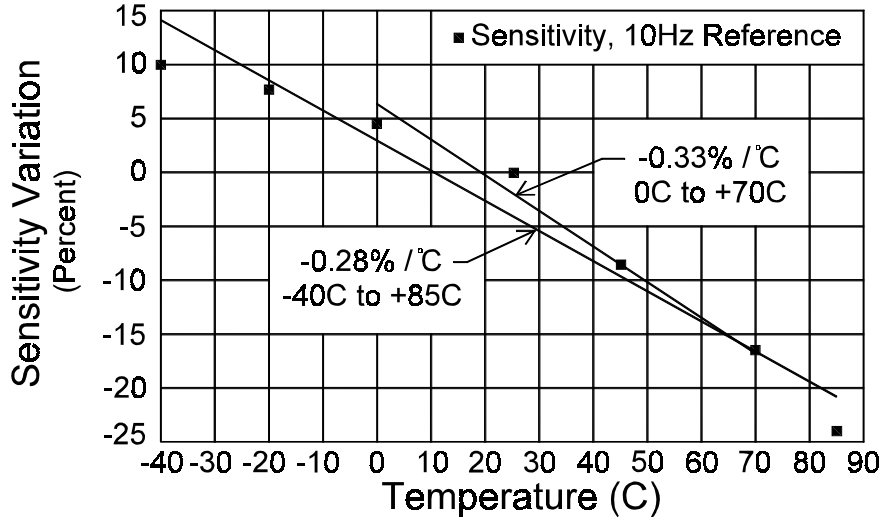

Printed in U.S.A. For drawings, technical data or samples, contact call 610-650-1500.
Specifications subject to change. Consult MSI for latest specifications.

3.0 REQUIREMENTS

3.1 Detailed Description

Each of the three sensing elements is a small cantilever beam consisting of a metal substrate with a piezoelectric polymer element affixed to one side. Each beam is supported at one end while the opposite end is allowed to flex in response to acceleration. The beam flex strains the piezoelectric material which in turn generates a charge proportional to the applied acceleration.

The beams are oriented to sense acceleration in the defined X, Y, and Z axes. Note that the X and Y axes are at a 45° angle relative to the accelerometer's package.

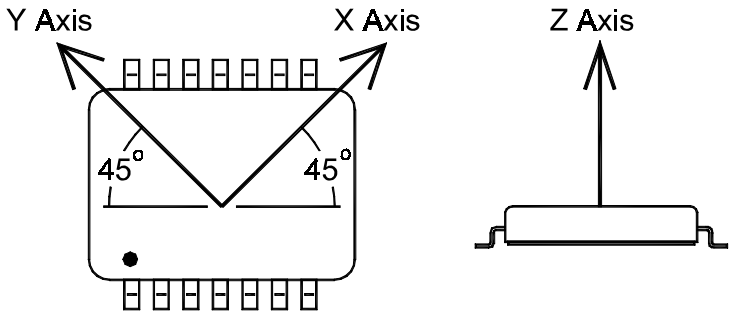

3.2 Electrical Interface

The ACH-04-08-05 contains three JFET's, one for each channel, which function as impedance converters easing electrical interface requirements. The JFET's are similar to the industry standard part number 2N4117. The JFET's MUST be biased for the accelerometer to function properly. There are many possible interface circuits. The JFET biasing circuit, used in MSI's final production test, is shown on page 4. Two other example circuits are shown below.

Constant Current Bias and Gain/Filter Stage

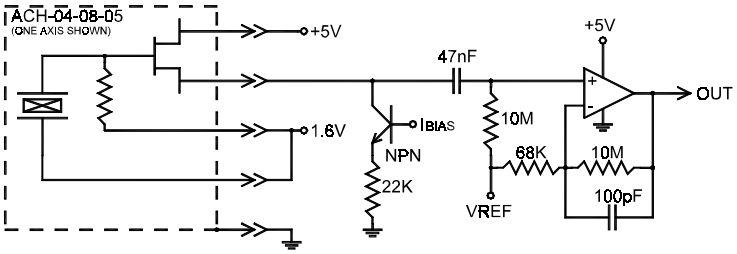

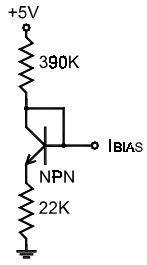

Notes:
1. VREF is typically 2.0V but should be scaled according to the operational amplifier's input common-mode range.
2. Circuit Gain: x148
3. High Pass Corner Frequency: 0.34 Hz
4. Low Pass Corner Frequency: 159 Hz
5. Circuit gain and corner frequencies can be adjusted. Circuit can also be scaled to operate at various supply voltages.

Resistor Bias with Split Supply

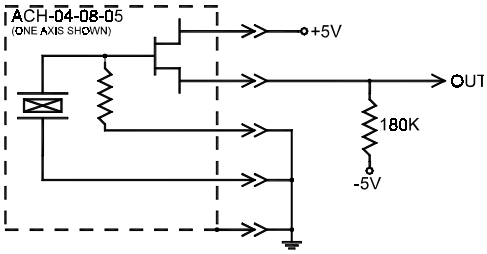

Notes:
1. Resistor value can be adjusted for individual applications.
2. +/- supply voltage can be scaled.

Printed in U.S.A. For drawings, technical data or samples, contact call 610-650-1500.
Specifications subject to change. Consult MSI for latest specifications.

The constant-current bias circuit minimizes device-to-device and temperature related JFET transconductance variations keeping the JFET gain near one (1). With the additional operational amplifier, the circuit has a gain of x148, a one-pole low-pass filter at 159Hz, and a one-pole high-pass filter at 0.34Hz. The circuit's component values and DC reference/supply voltages can be scaled to fit many applications.

The resistor bias circuit positions the operating point in the middle of the transconductance curve again minimizing transconductance variations. This circuit can also be powered from a single-supply voltage by creating an artificial ground, VREF.

The following figure shows the circuit used in MSI's Analog Test PCB (only one channel shown) which is available to quickly evaluate the basic characteristics of the ACH-04-08-05 accelerometer. Contact the factory to receive more information about the Analog Test PCB. Here, a resistor biasing scheme is used. The circuit runs from a single supply voltage by generating a reference voltage, VREF. The circuit has a gain of x47.8, a high-pass corner frequency of 0.34Hz, and a low-pass corner frequency of 185Hz. These values, as well as the operational amplifier, are easily changed to suit specific applications. As shown, the circuit typically draws only 13µA for all three axes.

Analog Test PCB: Low Power, Single Supply Circuit

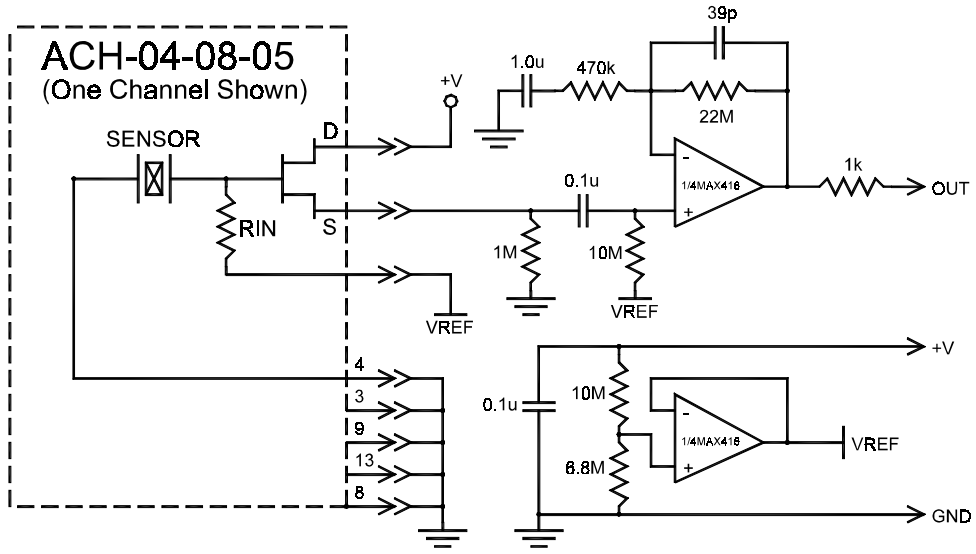

3.3 Sensitivity Variation versus Temperature

The ACH-04-08-05's typical sensitivity variation versus temperature is shown on Page 5. As shown, the sensor output varies +10% / -24% from -40°C to +85°C, respectively, relative to 25°C. From 0°C to +70°C, the sensitivity variation is typically +5% / -16%, respectively. For many applications, this variation is acceptable (less than ±2dB from -40°C to +85°C). If a tighter tolerance is required, the ACH-04-08-05 is easily temperature compensated. A

Printed in U.S.A. For drawings, technical data or samples, contact call 610-650-1500.
Specifications subject to change. Consult MSI for latest specifications.

simple method is to use linear temperature coefficient resistors in the feedback network of the operational amplifier used to condition the accelerometer's signal. KOA Speer Electronics, Inc.® (Bradford, PA) manufactures a variety of these resistors (LT73 and MLT product family). Using a -2800ppm/°C temperature compensating resistor yields a sensitivity variation of ±4% from -40°C to +85°C. From 0°C to +70°C, a variation of only ±2% is obtained using a -3300ppm/°C resistor. Note that since the resistors have negative temperature coefficients, they need to be placed in the circuit such that the gain increases with increasing temperature.

3.4 Temperature Transient Sensitivity

Because of the its very low operating frequency, the ACH-04-08-05 exhibits high Temperature Transient Sensitivity (TTS). TTS is defined as the accelerometer's output response to RAPID temperature changes and is expressed in equivalent g's per degree C. This effect should not be confused with the ACH-04-08-05's sensitivity shift versus

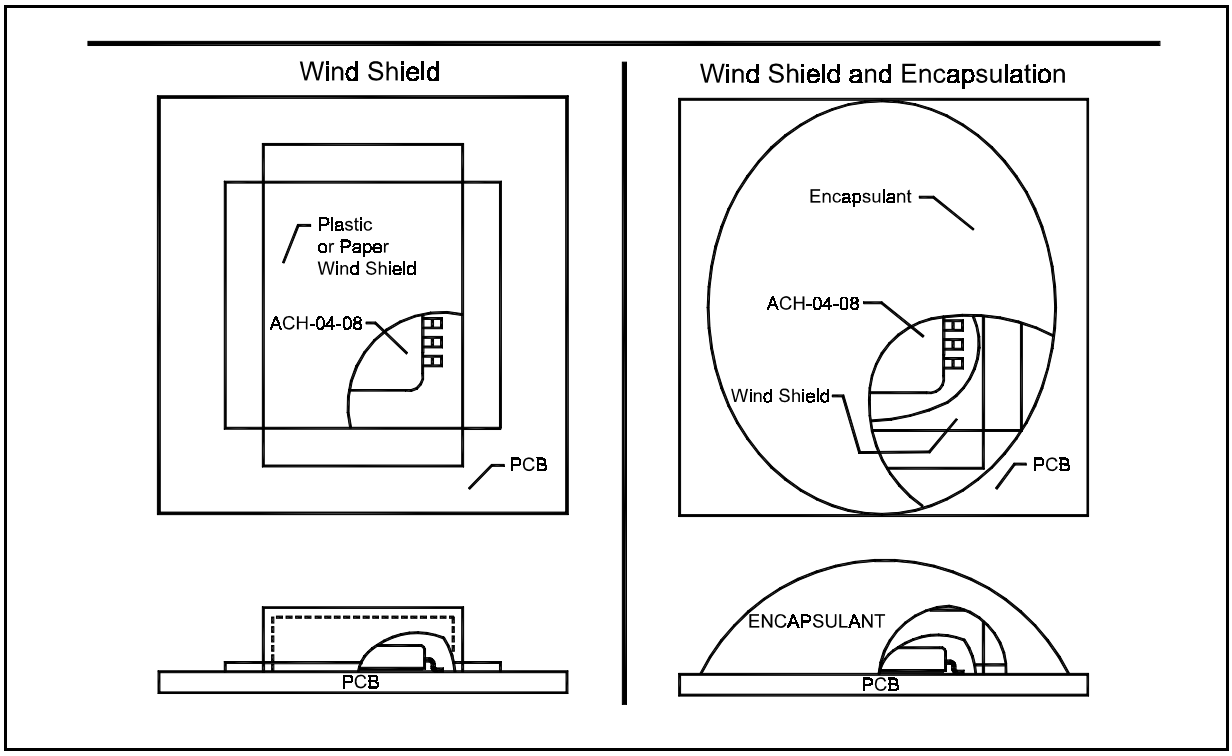

temperature which is defined at static (unchanging) temperatures and is unrelated to TTS (see above). The ACH-04-08-05's TTS will manifest itself as a low frequency ("DC") drift when the device is subjected to temperature gradients. Even small temperature changes can produce significant DC drift.

TTS results primarily from differences in the thermal coefficients of expansion (TCE) of the various materials in the accelerometer. During product development, every effort is made to match TCE's, however, many mismatches are unavoidable. Even small TCE mismatches can lead to high TTS when combined with low frequency measurement capability since TTS is primarily a low frequency phenomena.

Fortunately, it is easy to minimize TTS effects. The key is to prevent air currents, which are at various temperatures, from circulating around the ACH-04-08-05. These "wind currents" can be minimized by encasing the accelerometer in a shell. The shell can be made of almost anything. Successful TTS minimization shells have been made from

Printed in U.S.A. For drawings, technical data or samples, contact call 610-650-1500.
Specifications subject to change. Consult MSI for latest specifications.

plastic, paper, metal, etc. In fact, wind shields have been successfully integrated into the housing of the final circuit board assembly negating the need for additional parts. While the shell does not have to be air-tight, tighter seals provide better performance. Encapsulating the ACH-04-08-05 can also provide an effective wind shield. To ensure that the ACH-04-08-05's housing is not compressed under the weight of the encapsulant, MSI recommends that a spacer be placed above the unit. Note that the best performance is obtained by combining a wind shell with encapsulation.

3.5 Base Strain Sensitivity

The ACH-04-08-05 displays Base Strain Sensitivity (BSS) for many of the same reasons that it displays TTS; namely, low frequency operation and low modulus/high TCE materials. BSS is defined as the amount of output signal generated as a result of bending in the accelerometer's mounting surface and is expressed in terms of equivalent g's per input micro-strain, g/με.

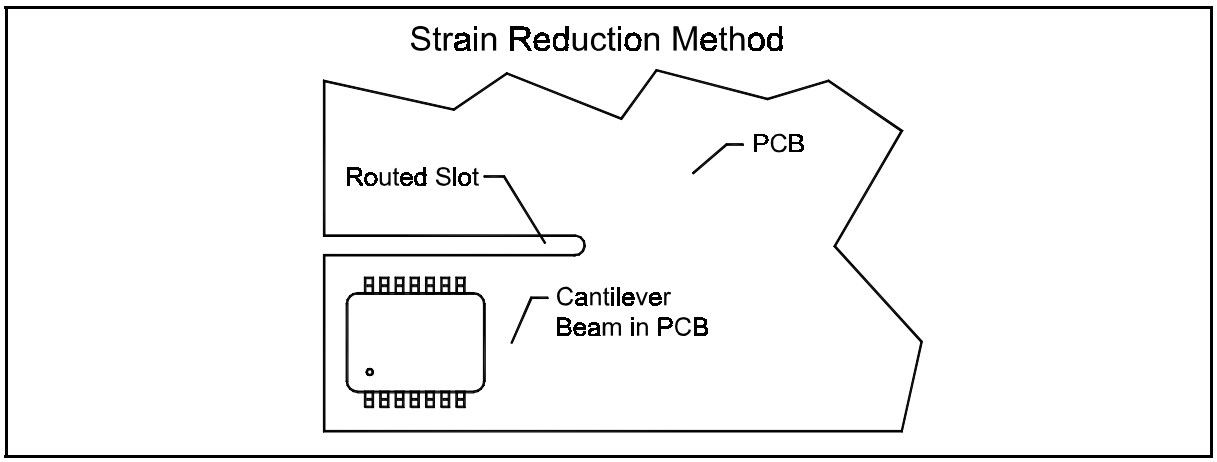

The best way to minimize BSS effects is to stiffen the mounting structure. Stiffer mounting structures are typically less susceptible to bending. However, since the ACH-04-08-05 is designed to be attached to a circuit board, it may be impractical to stiffen the mounting surface. In this situation, the accelerometer can be mounted at the end of a "cantilever beam" routed into the circuit board, where minimal strain is coupled into the accelerometer. Mounting arrangements such as this are very effective for low frequency applications. However, they are unacceptable for high frequency measurements where the signal to be measured is near or above the resonant frequency of the circuit board, cantilever beam. Implementation of a cantilever beam, strain minimization design requires careful analysis to accurately position the cantilever resonance well above the frequency range of interest.

3.6 IC Package

To insure proper protection against RF and EM interference, the outer surface of the package is conductive and electrically connected to the GND pin. Exercise caution when laying out PC boards to ensure that no uninsulated traces are located under the package. They could contact the package surface and be shorted to GND. It is recommended that all 14 pins of the package be soldered to the PC board to insure good mechanical coupling of acceleration, motion, and shock. Complete soldering will also eliminate undesirable mechanical resonances of the IC package.

Printed in U.S.A. For drawings, technical data or samples, contact call 610-650-1500.
Specifications subject to change. Consult MSI for latest specifications.

The package is sealed to eliminate the effects of normal exposure to the environment and typical cleaning processes found in an electronic manufacturing facility. However, the package seal is not hermetic and exposure to acidic, basic, corrosive, or aqueous environments is not recommended. Because of process variations, the ACH-04-08-05 should be qualified through the intended production assembly processes (soldering, wash, etc.) before releasing to production. **The device is NOT IR reflow solderable**. Recommended alternative soldering processes include laser, hand and hot bar soldering. The ACH-04-08-05 can be manufactured to suit wave (not IR) soldering processes. Contact MSI for more detailed information.

3.7 ACH-04-08-05 Mechanical Dimensions

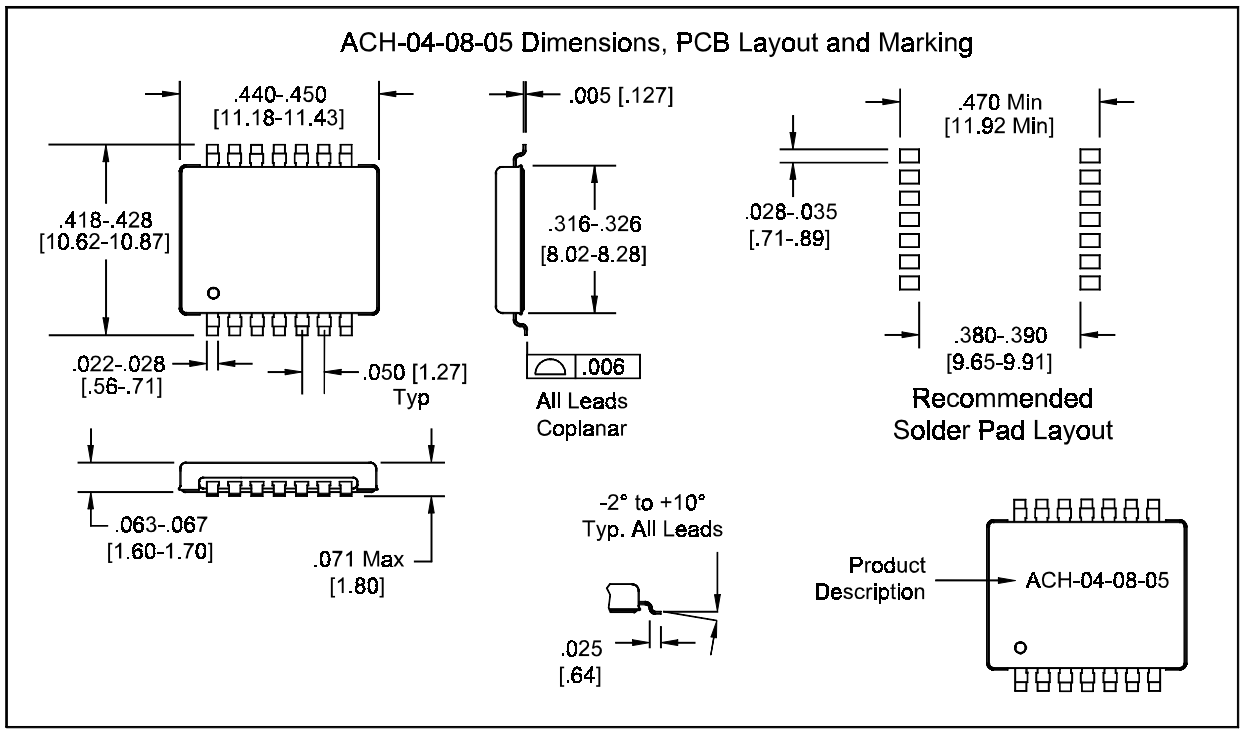

Printed in U.S.A. For drawings, technical data or samples, contact call 610-650-1500.
Specifications subject to change. Consult MSI for latest specifications.