FAIRCHILD SEMICONDUCTOR™

October 1989
Revised August 2000

100354
Low Power 8-Bit Register with Cut-Off Drivers

General Description

The 100354 contains eight D-type edge triggered, master/slave flip-flops with individual inputs (D_n), true outputs (Q_n), a clock input (CP), an output enable pin ($\overline{OEN}$), and a common clock enable pin ($\overline{CEN}$). Data enters the master when CP is LOW and transfers to the slave when CP goes HIGH. When the $\overline{CEN}$ input goes HIGH it overrides all other inputs, disables the clock, and the Q outputs maintain the last state.

A Q output follows its D input when the $\overline{OEN}$ pin is LOW. A HIGH on $\overline{OEN}$ holds the outputs in a cut-off state. The cut-off state is designed to be more negative than a normal ECL LOW level. This allows the output emitter-followers to turn off when the termination supply is −2.0V, presenting a high impedance to the data bus. This high impedance reduces termination power and prevents loss of low state noise margin when several loads share the bus.

The 100354 outputs are designed to drive a doubly terminated 50Ω transmission line (25Ω load impedance). All inputs have 50 kΩ pull-down resistors.

Features

- Cut-off drivers
- Drives 25Ω load
- Low power operation
- 2000V ESD protection
- Voltage compensated operating range = −4.2V to −5.7V
- Available to industrial grade temperature range

Ordering Code:

Order Number	Package Number	Package Description
100354PC	N24E	24-Lead Plastic Dual-In-Line Package (PDIP), JEDEC MS-010, 0.400 Wide
100354QC	V28A	28-Lead Plastic Lead Chip Carrier (PLCC), JEDEC MO-047, 0.450 Square
100354QI	V28A	28-Lead Plastic Lead Chip Carrier (PLCC), JEDEC MO-047, 0.450 Square Industrial Temperature Range (−40°C to +85°C)

Devices also available in Tape and Reel. Specify by appending the suffix letter "X" to the ordering code.

Logic Symbol

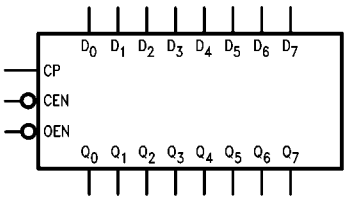

Pin Descriptions

Pin Names	Description
D_0–D_7	Data Inputs
$\overline{CEN}$	Clock Enable Input
CP	Clock Input (Active Rising Edge)
$\overline{OEN}$	Output Enable Input
Q_0–Q_7	Data Outputs

Connection Diagrams

24-Pin DIP

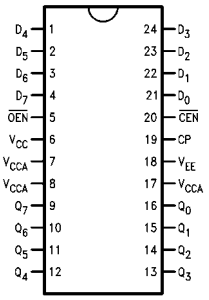

28-Pin PLCC

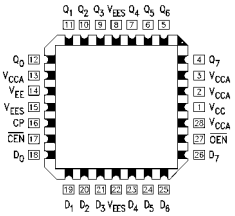

© 2000 Fairchild Semiconductor Corporation

Truth Table

Inputs				Outputs
D_n	$\overline{CEN}$	CP	$\overline{OEN}$	Q_n
L	L	↗	L	L
H	L	↗	L	H
X	X	L	L	NC
X	X	H	L	NC
X	H	X	L	NC
X	X	X	H	Cutoff

H = HIGH Voltage Level
L = LOW Voltage Level
NC = No Change
X = Don't Care
Cutoff = Lower-than-LOW State
↗ = LOW-to-HIGH Transition

Logic Diagram

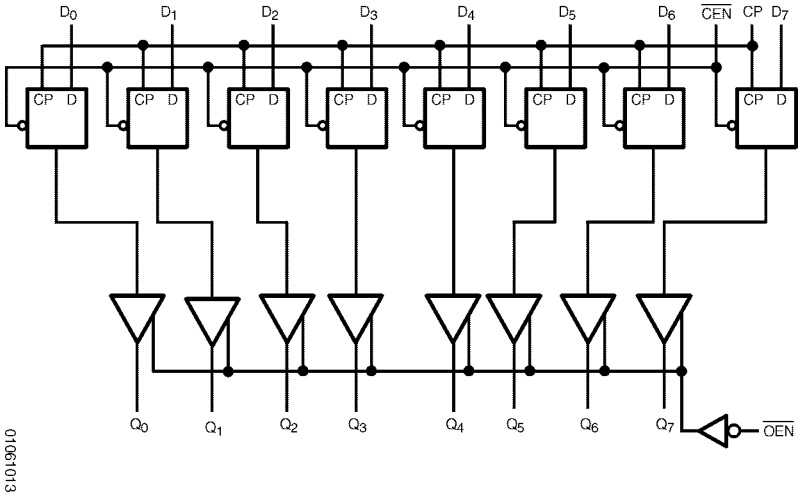

01061013

Absolute Maximum Ratings(Note 1)

Storage Temperature (T_{STG})	−65°C to +150°C
Maximum Junction Temperature (T_J)	+150°C
V_{EE} Pin Potential to Ground Pin	−7.0V to +0.5V
Input Voltage (DC)	V_{EE} to +0.5V
Output Current (DC Output HIGH)	−100 mA
ESD (Note 2)	≥2000V

Recommended Operating Conditions

Case Temperature (T_C)	
Commercial	0°C to +85°C
Industrial	−40°C to +85°C
Supply Voltage (V_{EE})	−5.7V to −4.2V

Note 1: The "Absolute Maximum Ratings" are those values beyond which the safety of the device cannot be guaranteed. The device should not be operated at these limits. The parametric values defined in the Electrical Characteristics tables are not guaranteed at the absolute maximum rating. The "Recommended Operating Conditions" table will define the conditions for actual device operation.

Note 2: ESD testing conforms to MIL-STD-883, Method 3015.

Commercial Version

DC Electrical Characteristics (Note 3)

V_{EE} = −4.2V to −5.7V, V_{CC} = V_{CCA} = GND, T_C = 0°C to +85°C

Symbol	Parameter	Min	Typ	Max	Units	Conditions	
V_{OH}	Output HIGH Voltage	−1025	−955	−870	mV	V_{IN} =$V_{IH\ (Max)}$	Loading with
V_{OL}	Output LOW Voltage	−1830	−1705	−1620		or $V_{IL\ (Min)}$	25Ω to −2.0V
V_{OHC}	Output HIGH Voltage	−1035			mV	V_{IN} = $V_{IH\ (Min)}$	Loading with
V_{OLC}	Output LOW Voltage			−1610		or $V_{IL\ (Max)}$	25Ω to −2.0V
V_{OLZ}	Cutoff LOW Voltage			−1950	mV	V_{IN} = V_{IH} (Min) or V_{IL} (Max)	$\overline{OEN}$ = HIGH
V_{IH}	Input HIGH Voltage	−1165		−870	mV	Guaranteed HIGH Signal for All Inputs	
V_{IL}	Input LOW Voltage	−1830		−1475	mV	Guaranteed LOW Signal for All Inputs	
I_{IL}	Input LOW Current	0.50			µA	V_{IN} = $V_{IL\ (Min)}$	
I_{IH}	Input HIGH Current			240	µA	V_{IN} = $V_{IH\ (Max)}$	
I_{EE}	Power Supply Current					Inputs Open	
		−202		−105	mA	V_{EE} = −4.2V to −4.8V	
		−209		−105		V_{EE} = −4.2V to −5.7V	

Note 3: The specified limits represent the "worst case" value for the parameter. Since these values normally occur at the temperature extremes, additional noise immunity and guardbanding can be achieved by decreasing the allowable system operating ranges. Conditions for testing shown in the tables are chosen to guarantee operation under "worst case" conditions.

Commercial Version (Continued)
DIP AC Electrical Characteristics

V_{EE} = –4.2V to –5.7V, V_{CC} = V_{CCA} = GND

Symbol	Parameter	T_C = 0°C		T_C = +25°C		T_C = +85°C		Units	Conditions
		Min	Max	Min	Max	Min	Max		
f_{MAX}	Toggle Frequency	250		250		250		MHz	Figures 1, 4
t_{PLH} t_{PHL}	Propagation Delay CP to Output	1.40	3.00	1.40	3.00	1.50	3.10	ns	Figures 1, 4 (Note 4)
t_{PZH} t_{PHZ}	Propagation Delay $\overline{OEN}$ to Output	1.60 1.00	4.20 2.70	1.60 1.00	4.20 2.70	1.60 1.00	4.20 2.70	ns	Figures 3, 7 (Note 4)
t_{TLH} t_{THL}	Transition Time 20% to 80%, 80% to 20%	0.45	2.00	0.45	2.00	0.45	2.00	ns	Figures 1, 4
t_S	Setup Time D_n $\overline{CEN}$ (Disable Time) $\overline{CEN}$ (Release Time)	 1.10 0.40 1.10		 1.10 0.40 1.10		 1.10 0.40 1.10		 ns	 Figures 2, 5
t_H	Hold Time D_n	0.10		0.10		0.10		ns	Figures 1, 6
t_{PW}(H)	Pulse Width HIGH CP	2.00		2.00		2.00		ns	Figures 1, 4

Note 4: The propagation delay specified is for single output switching. Delays may vary up to 300 ps with multiple outputs switching.

PLCC AC Electrical Characteristics

V_{EE} = –4.2V to –5.7V, V_{CC} = V_{CCA} = GND

Symbol	Parameter	T_C = 0°C		T_C = +25°C		T_C = +85°C		Units	Conditions
		Min	Max	Min	Max	Min	Max		
f_{MAX}	Toggle Frequency	250		250		250		MHz	Figures 1, 4
t_{PLH} t_{PHL}	Propagation Delay CP to Output	1.40	2.80	1.40	2.80	1.50	2.90	ns	Figures 1, 4 (Note 5)
t_{PZH} t_{PHZ}	Propagation Delay $\overline{OEN}$ to Output	1.60 1.00	4.00 2.50	1.60 1.00	4.00 2.50	1.60 1.00	4.00 2.50	ns	Figures 3, 7 (Note 5)
t_{TLH} t_{THL}	Transition Time 20% to 80%, 80% to 20%	0.45	1.90	0.45	1.90	0.45	1.90	ns	Figures 1, 4
t_S	Setup Time D_n $\overline{CEN}$ (Disable Time) $\overline{CEN}$ (Release Time)	 1.00 0.30 1.00		 1.00 0.30 1.00		 1.00 0.30 1.00		 ns	 Figures 2, 5
t_H	Hold Time D_n	0.00		0.00		0.00		ns	Figures 1, 6
t_{PW}(H)	Pulse Width HIGH CP	2.00		2.00		2.00		ns	Figures 1, 4
t_{OSHL}	Maximum Skew Common Edge Output-to-Output Variation Clock to Output Path		280		280		280	ps	(Note 6)
t_{OSLH}	Maximum Skew Common Edge Output-to-Output Variation Clock to Output Path		340		340		340	ps	(Note 6)
t_{OST}	Maximum Skew Opposite Edge Output-to-Output Variation Clock to Output Path		340		340		340	ps	(Note 6)
t_{PS}	Maximum Skew Pin (Signal) Transition Variation Clock to Output Path		250		250		250	ps	(Note 6)

Note 5: The propagation delay specified is for single output switching. Delays may vary up to 300 ps with multiple outputs switching.

Note 6: Output-to-Output Skew is defined as the absolute value of the difference between the actual propagation delay for any outputs within the same packaged device. The specifications apply to any outputs switching in the same direction either HIGH-to-LOW (t_{OSHL}), or LOW-to-HIGH (t_{OSLH}), or in opposite directions both HL and LH (t_{OST}). Parameters t_{OST} and t_{PS} guaranteed by design.

Industrial Version

PLCC DC Electrical Characteristics (Note 7)

V_{EE}=–4.2V to –5.7V, V_{CC}= V_{CCA}= GND, T_C=–40°C to +85°C

Symbol	Parameter	T_C = –40°C		T_C = 0° to +85°C		Units	Conditions	
		Min	Max	Min	Max			
V_{OH}	Output HIGH Voltage	–1085	–870	–1025	–870	mV	V_{IN} =V_{IH} (Max)	Loading with
V_{OL}	Output LOW Voltage	–1830	–1575	–1830	–1620		or V_{IL} (Min)	50Ω to –2.0V
V_{OHC}	Output HIGH Voltage	–1095		–1035		mV	V_{IN} = V_{IH} (Min)	Loading with
V_{OLC}	Output LOW Voltage		–1565		–1610		or V_{IL} (Max)	50Ω to –2.0V
V_{OLZ}	Cutoff LOW Voltage		–1900		–1950	mV	V_{IN} = V_{IH} (Min) or V_{IL} (Max)	$\overline{OEN}$ = HIGH
V_{IH}	Input HIGH Voltage	–1170	–870	–1165	–870	mV	Guaranteed HIGH Signal for All Inputs	
V_{IL}	Input LOW Voltage	–1830	–1480	–1830	–1475	mV	Guaranteed LOW Signal for All Inputs	
I_{IL}	Input LOW Current	0.50		0.50		µA	V_{IN} = V_{IL} (Min)	
I_{IH}	Input HIGH Current		240		240	µA	V_{IN} = V_{IH} (Max)	
I_{EE}	Power Supply Current						Inputs Open	
		–202	–105	–202	–105	mA	V_{EE} = –4.2V to –4.8V	
		–209	–105	–209	–105		V_{EE} = –4.2V to –5.7V	

Note 7: The specified limits represent the "worst case" value for the parameter. Since these values normally occur at the temperature extremes, additional noise immunity and guardbanding can be achieved by decreasing the allowable system operating ranges. Conditions for testing shown in the tables are chosen to guarantee operation under "worst case" conditions.

PLCC AC Electrical Characteristics

V_{EE} = –4.2V to –5.7V, V_{CC} = V_{CCA} = GND

Symbol	Parameter	T_C = –40°C		T_C = +25°C		T_C = +85°C		Units	Conditions
		Min	Max	Min	Max	Min	Max		
f_{MAX}	Toggle Frequency	250		250		250		MHz	Figures 1, 4
t_{PLH}	Propagation Delay	1.40	2.80	1.40	2.80	1.50	2.90	ns	Figures 1, 4
t_{PHL}	CP to Output								(Note 8)
t_{PZH}	Propagation Delay	1.50	4.10	1.60	4.00	1.60	4.00	ns	Figures 3, 5
t_{PHZ}	$\overline{OEN}$ to Output	1.00	2.50	1.00	2.50	1.00	2.50		(Note 8)
t_{TLH}	Transition Time	0.45	1.90	0.45	1.90	0.45	1.90	ns	Figures 1, 4
t_{THL}	20% to 80%, 80% to 20%								
t_S	Setup Time								
	D_n	1.00		1.00		1.00			
	$\overline{CEN}$ (Disable Time)	0.30		0.30		0.30		ns	Figures 2, 5
	$\overline{CEN}$ (Release Time)	1.00		1.00		1.00			
t_H	Hold Time D_n	0.00		0.00		0.00		ns	Figures 1, 6
t_{PW}(H)	Pulse Width High CP	2.00		2.00		2.00		ns	Figures 1, 4

Note 8: The propagation delay specified is for single output switching. Delays may vary up to 300 ps with multiple outputs switching.

Test Circuitry

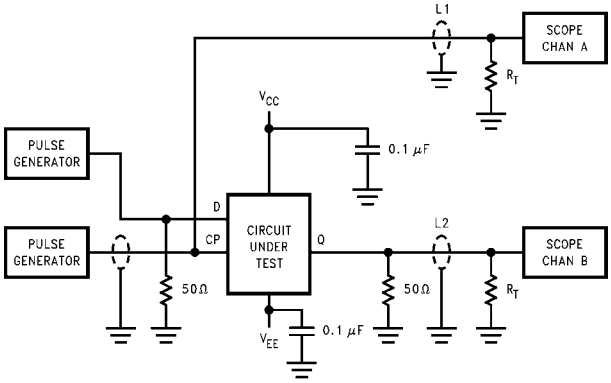

FIGURE 1. Toggle Frequency Test Circuit

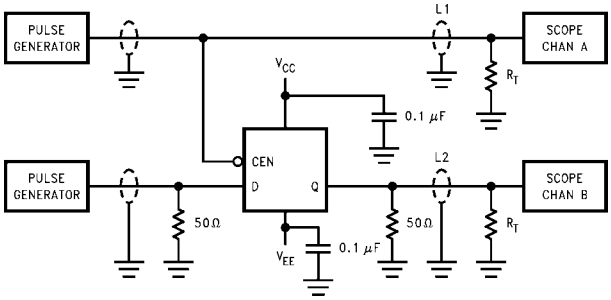

FIGURE 2. AC Test Circuit

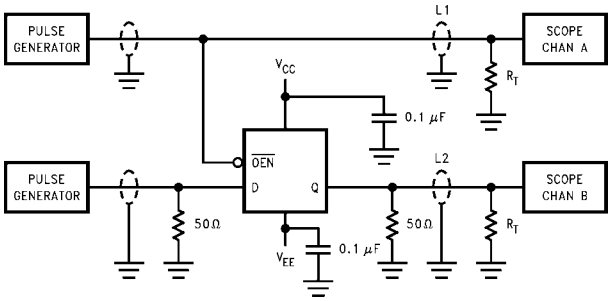

FIGURE 3. AC Test Circuit

Notes:

V_{CC}, V_{CCA} = +2V, V_{EE} = −2.5V

L1 and L2 = equal length 50Ω impedance lines

R_T = 50Ω terminator internal to scope

Decoupling 0.1 μF from GND to V_{CC} and V_{EE}

All unused outputs are loaded with 25Ω to GND

C_L = Fixture and stray capacitance ≤ 3 pF

Switching Waveforms

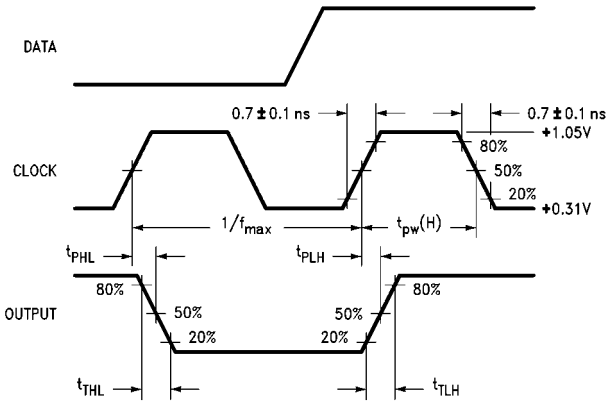

FIGURE 4. Propagation Delay (Clock) and Transition Times

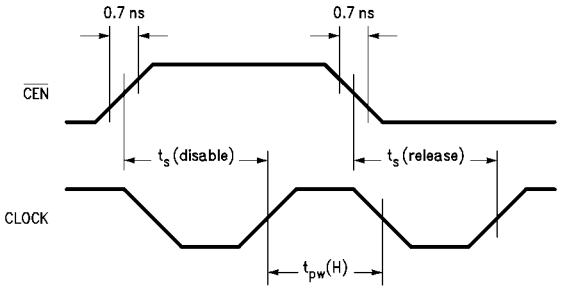

FIGURE 5. Setup and Pulse Width Times

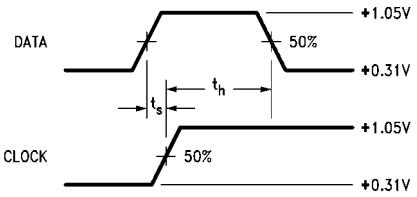

Notes:

t_S is the minimum time before the transition of the clock that information must be present at the data input.

t_H is the minimum time after the transition of the clock that information must remain unchanged at the data input.

FIGURE 6. Data Setup and Hold Time

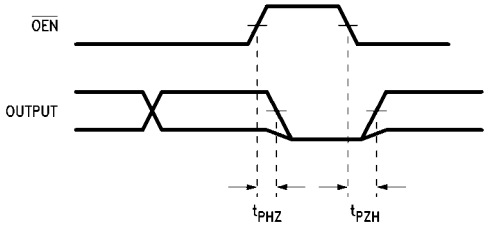

Note:

The output AC measurement point for cut-off propagation delay testing = the 50% voltage point between active V_{OL} and V_{OH}.

FIGURE 7. Cutoff Times

100354

Physical Dimensions inches (millimeters) unless otherwise noted

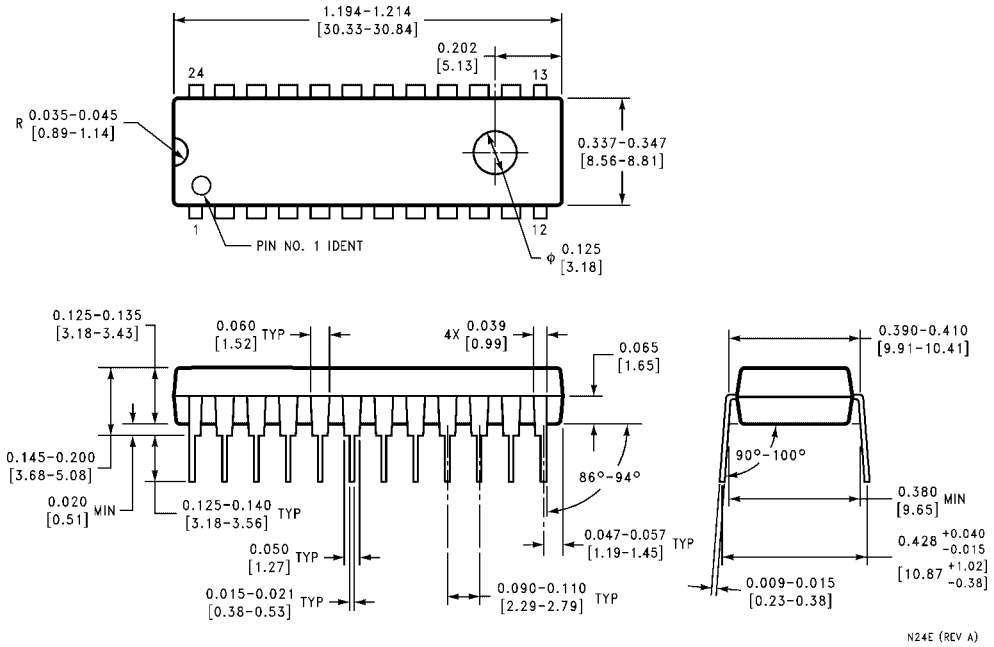

24-Lead Plastic Dual-In-Line Package (PDIP), JEDEC MS-010, 0.400 Wide
Package Number N24E

Physical Dimensions inches (millimeters) unless otherwise noted (Continued)

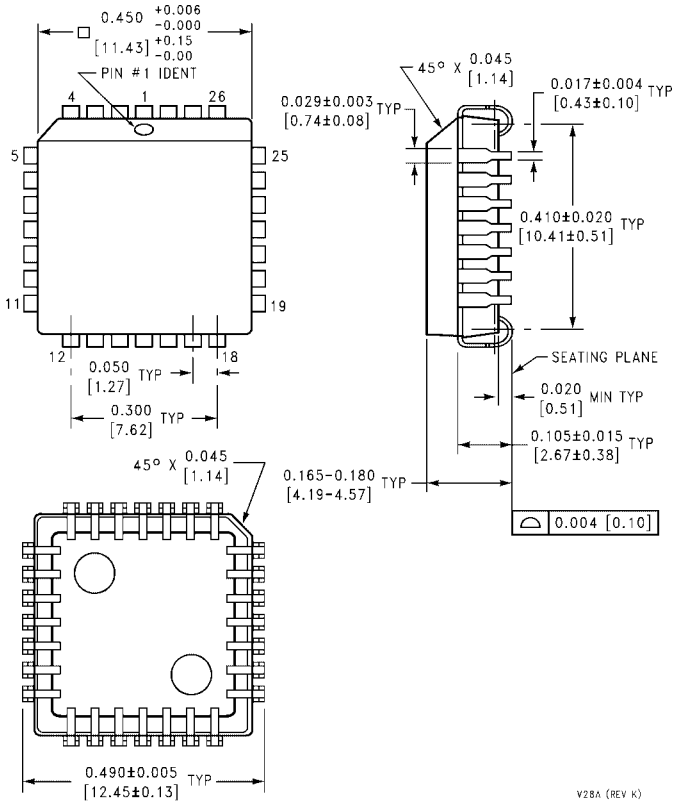

28-Lead Plastic Lead Chip Carrier (PLCC), JEDEC MO-047, 0.450 Square
Package Number V28A

Fairchild does not assume any responsibility for use of any circuitry described, no circuit patent licenses are implied and Fairchild reserves the right at any time without notice to change said circuitry and specifications.

LIFE SUPPORT POLICY

FAIRCHILD'S PRODUCTS ARE NOT AUTHORIZED FOR USE AS CRITICAL COMPONENTS IN LIFE SUPPORT DEVICES OR SYSTEMS WITHOUT THE EXPRESS WRITTEN APPROVAL OF THE PRESIDENT OF FAIRCHILD SEMICONDUCTOR CORPORATION. As used herein:

1. Life support devices or systems are devices or systems which, (a) are intended for surgical implant into the body, or (b) support or sustain life, and (c) whose failure to perform when properly used in accordance with instructions for use provided in the labeling, can be reasonably expected to result in a significant injury to the user.
2. A critical component in any component of a life support device or system whose failure to perform can be reasonably expected to cause the failure of the life support device or system, or to affect its safety or effectiveness.

www.fairchildsemi.com