Series 647 Universal SOIC-to-DIP 0.600 [15.24] Adapter

FEATURES

- 44-pin Adapter for Mounting Aries Series 547 Universal SOIC ZIF Test Socket to 0.600 [15.24] DIP PCB Layout

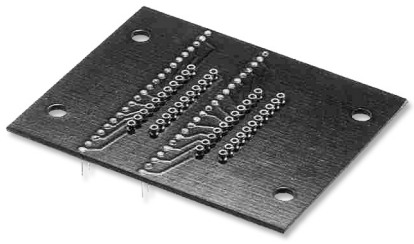

ORDERING INFORMATION

Specify **44-647-10**

GENERAL SPECIFICATIONS

- **BODY MATERIAL**: black 0.062 [1.58] thick FR-4 **–OR–** IS410 per IPC A4101A/26, 0.094 [2.39] thick, with 1-oz. min. Cu traces
- **FEMALE PIN BODY**: Brass 360 1/2-hard per UNS C36000 ASTM-B16-00
- **FEMALE PIN BODY PLATING**: 200µ [5.08µ] min. Sn per ASTM B545 Type 1 over 100µ [2.54µ] min. Ni per SAE AMS-QQ-N-290
- **4-FINGER COLLET CONTACT**: BeCu per UNS C17200 ASTM-B194-01
- **COLLET CONTACT PLATING**: 10µ [0.254µ] min. Au per MIL-G-45204 over 50µ [1.27µ] min. Ni per SAE AMS-QQ-N-290
- **MALE PIN**: Phosphor Bronze 544 UNS C5400 ASTM B139-90
- **MALE PIN PLATING**: 200µ [5.08µ] min. Sn per ASTM B545 Type 1 over 100µ [2.54µ] min. Ni per SAE AMS-QQ-N-290
- **COLLET CONTACT CURRENT RATING**: 3 amps
- **OPERATING TEMPERATURE**: 221°F [105°C]
- **INSERTION FORCE**: 180g/pin, based on a 0.018 [0.46] dia. test lead
- **WITHDRAWAL FORCE**: 90g/pin, based on a 0.018 [0.46] dia. test lead
- **NORMAL FORCE**: 140g/pin, based on a 0.018 [0.46] dia. test lead

MOUNTING CONSIDERATIONS

- **SUGGESTED PCB HOLE SIZE**: 0.028 ±0.002 [0.71 ±0.05] dia.

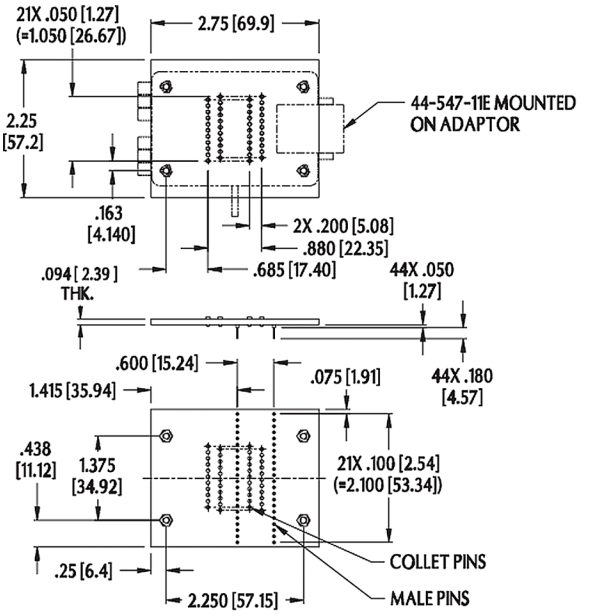

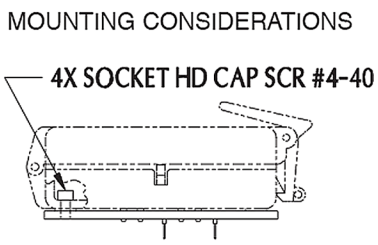

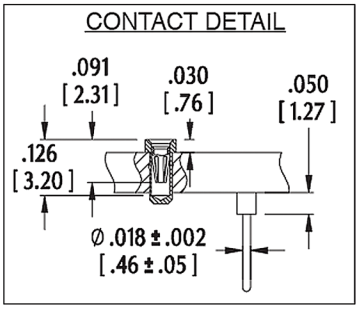

ALL DIMENSIONS: INCHES [MILLIMETERS]
ALL TOLERANCES: ±0.005 [0.13] UNLESS OTHERWISE SPECIFIED
FOR TEST SOCKETS, SEE DATA SHEET 10015
CONSULT FACTORY FOR OTHER SIZES AND CONFIGURATIONS

CUSTOMIZATION: ARIES SPECIALIZES IN CUSTOM DESIGN AND PRODUCTION. SPECIAL MATERIALS, PLATINGS, SIZES, AND CONFIGURATIONS CAN BE FURNISHED, DEPENDING ON QUANTITY.

ARIES RESERVES THE RIGHT TO CHANGE PRODUCT GENERAL SPECIFICATIONS WITHOUT NOTICE

PRINTOUTS OF THIS DOCUMENT MAY BE OUT-OF-DATE AND SHOULD BE CONSIDERED UNCONTROLLED

ARIES ELECTRONICS, INC.
2609 Bartram Road • Bristol, PA 19007-6810 USA
TEL 215-781-9956 • FAX 215-781-9845
WWW.ARIESELEC.COM • INFO@ARIESELEC.COM

RoHS Compliant