

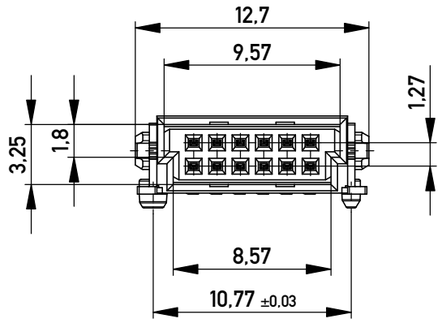

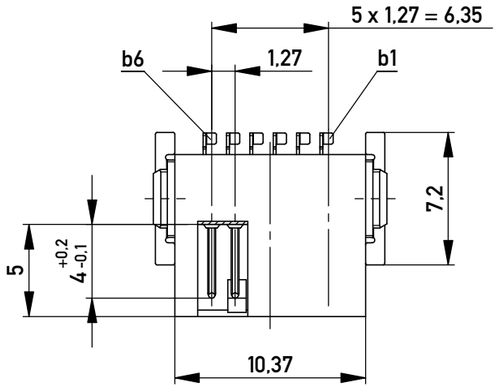

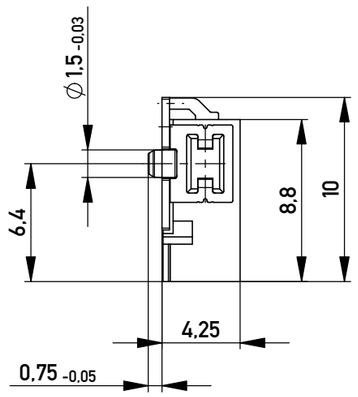

Anforderungsstufe 1
Performance Level 1

Kontaktbereich vergoldet
Mating Area gold plating

Anschlussbereich verzinnt 4-6 µm
Terminal Area 4-6 µm tin plating

Koplanarität der Anschlüsse ≤ 0,1 mm
Coplanarity Area of Termination ≤ 0,1 mm

Verpackt im Gurt nach DIN IEC 60286-3
Tape on Reel Packaging according to DIN IEC 60286-3
Verpackungseinheit: 560 Stück
Packaging unit: 560 pcs

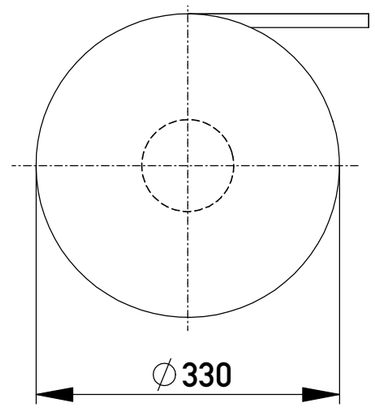

Abspulrichtung - *Reel off Direction*

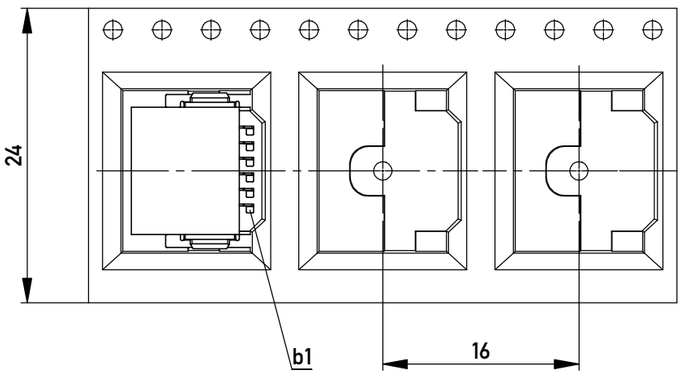

Leiterplatten-Layout Vorschlag für SMT
PCB-Layout Proposal for SMT

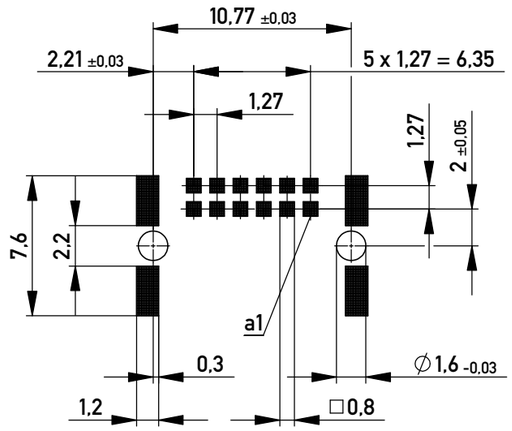

BA7-03 - Standard Bauhöhe
type7-03 - Standard Assembly Height

Copyright by ERNI Production GmbH & Co. KG
Proprietary notice pursuant to ISO 16016 to be observed.

Information:

Tolerances

All Dimensions in mm

Scale 3:1

All rights reserved.
Only for Information.
To ensure that this is the latest version of this drawing, please contact one of the ERNI companies before using.

Subject to modification without prior notice.
Drawing will not be updated.

Designation
Messerl. SMC-B 12-SMD-BA7-03
Male SMC-B 12-SMD-type7-03

ERNI www.ERNI.com

100103210101

Index		Date	
e		17.07.2015	

K
A3

Class SMCB