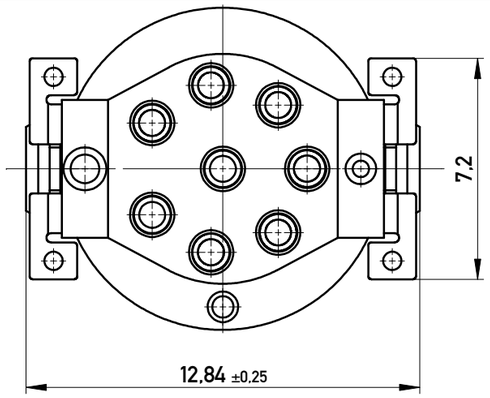

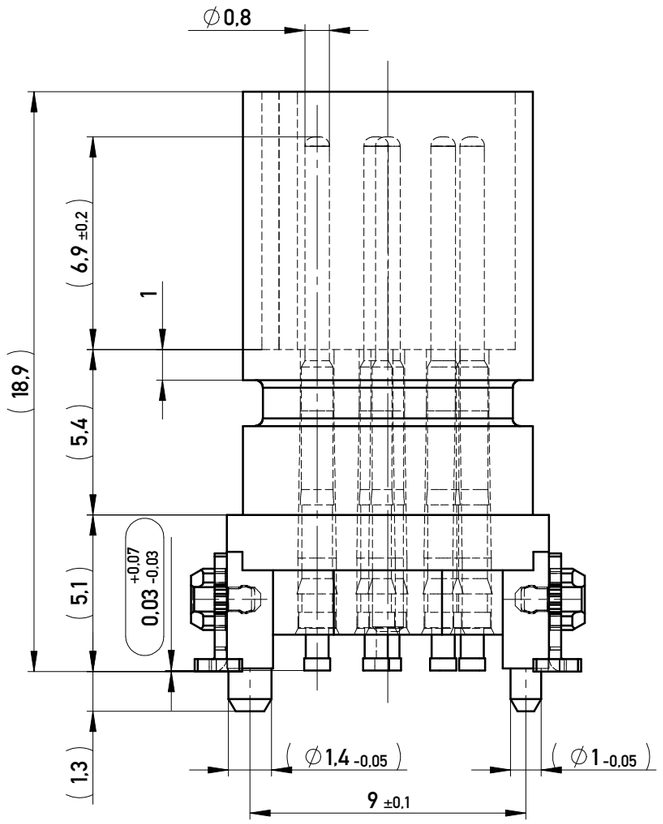

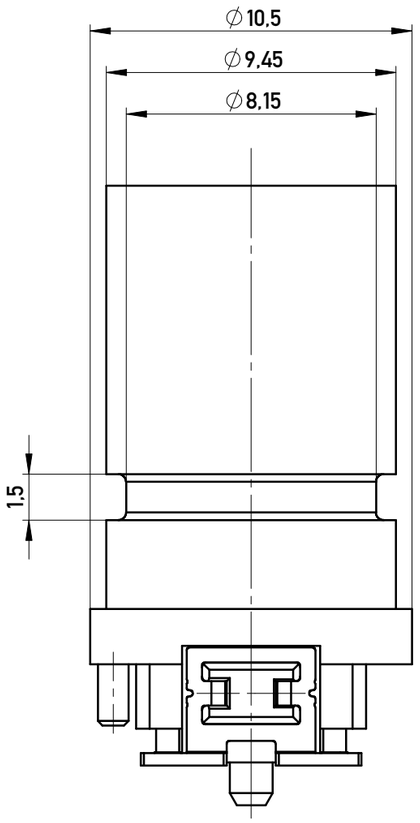

Verpackt in Gurtverpackung - *Tape on Reel Packaging*
Verpackungseinheit: 75 Stück - *Packaging unit: 75 pcs*

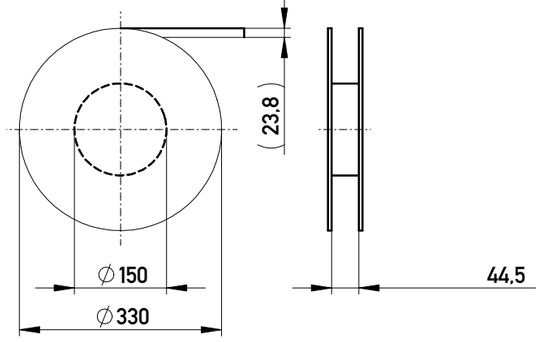

Abspulrichtung - *Reel off Direction*

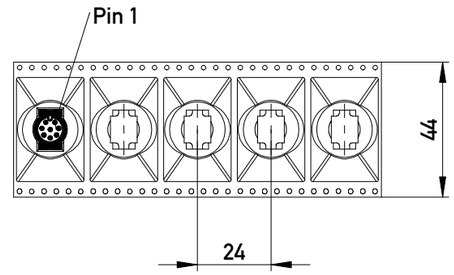

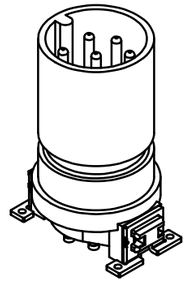

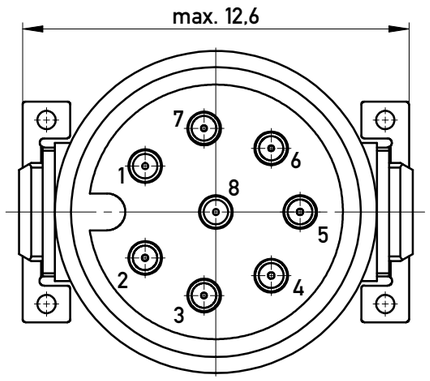

Layout - Vorschlag
PCB - Layout proposal

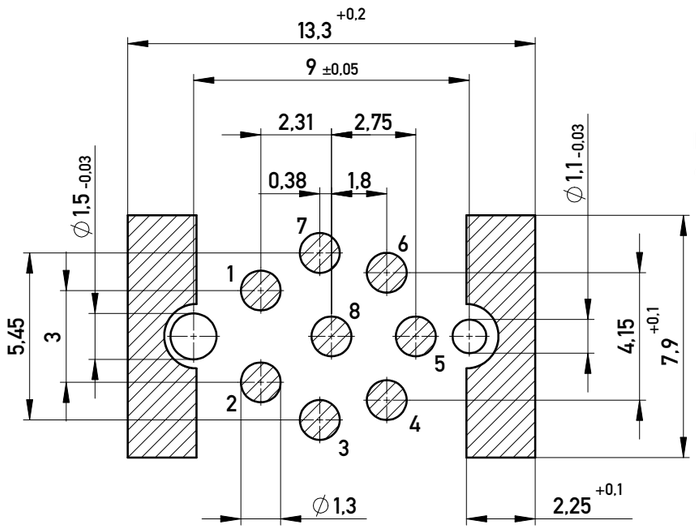

Koplanarität aller Kontakte und Clip <=0,1mm
coplanarity of all contacts and clips <=0,1mm

100103210063	8 Pol. A Cod.	Gurtverp./ tape on reel
Ident.-Nr.	Typ	Bemerkung

Information:

Tolerances — All Dimensions in mm

Scale 5:1

Copyright by ERNI Production GmbH & Co. KG
Proprietary notice pursuant to ISO 16016 to be observed.

All rights reserved.
Only for Information.
To ensure that this is the latest version of this drawing, please contact one of the ERNI companies before using.

Subject to modification without prior notice.
Drawing will not be updated.

ERNI www.ERNI.com

Designation
Messerleiste M12 8pol.A Cod
10,5mm o.Dichtung mit Einstich

100103210063

Index		Date	
f		16.10.2014	

I
A3

Class M12