

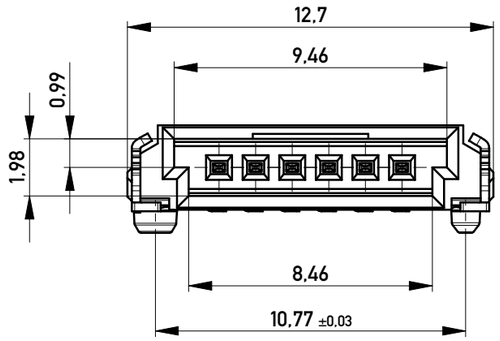

Anforderungsstufe 1
Performance Level 1

Kontaktbereich vergoldet
Mating Area gold plating

Anschlussbereich verzinnt 4-6 µm
Terminal Area 4-6 µm tin plating

Koplanarität der Anschlüsse ≤ 0,1 mm
Coplanarity Area of Termination ≤ 0,1 mm

Verpackt in Gurtverpackung
Tape on Reel Packaging
Verpackungseinheit: 1000 Stück
Packaging unit: 1000 pcs

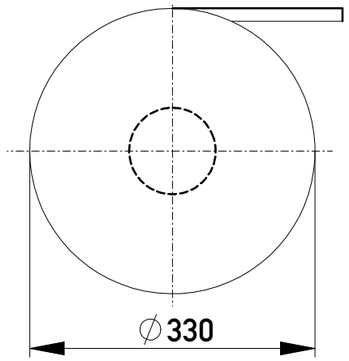

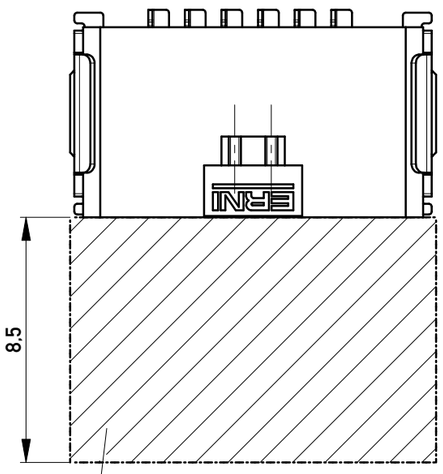

Sperrfläche für Leiterbahnen
gültig bei Verwendung von
Gegenstecker Federleiste 90°
in SKV Ausführung
Restricted area for conductors
valid for use by mating
female connector 90°
in IDC version

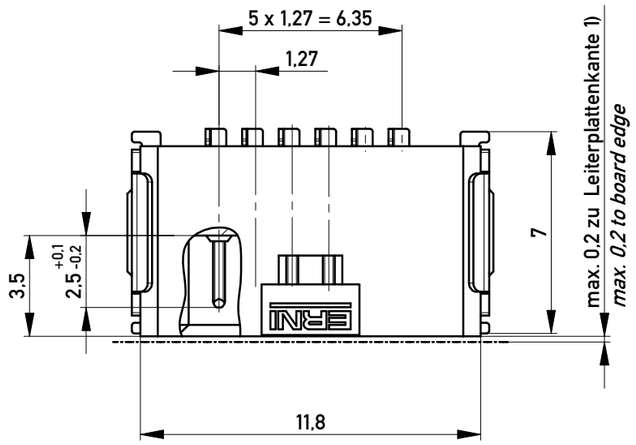

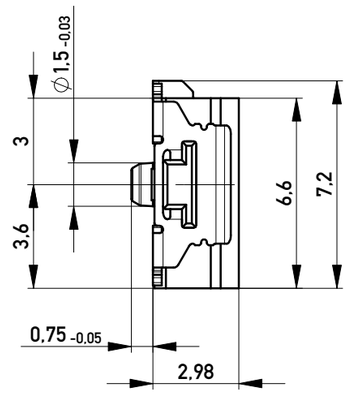

Abspulrichtung - *Reel off Direction*

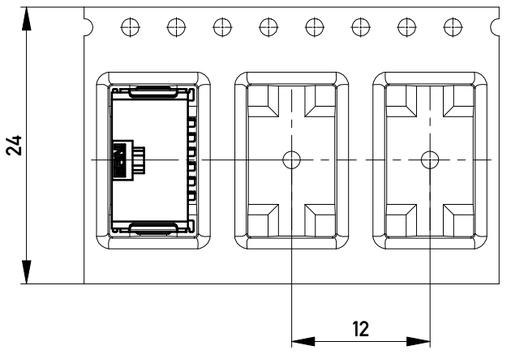

Leiterplatten-Layout für SMT
PCB-Layout for SMT

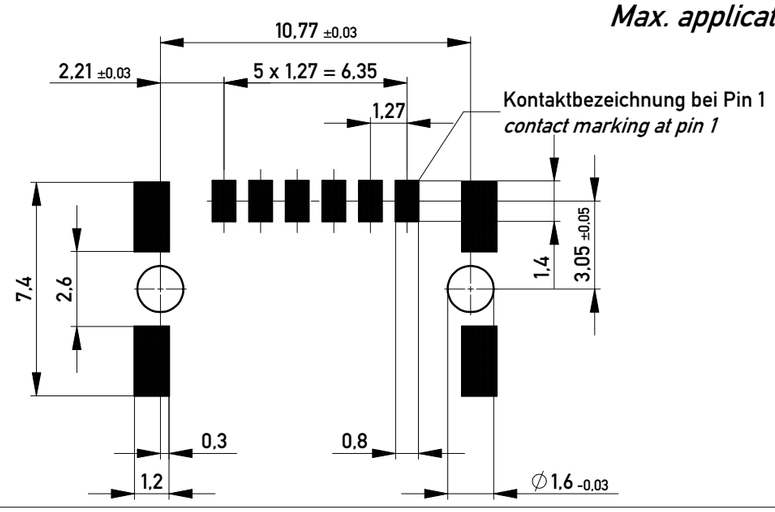

Max. Applikationstemperatur 150°C
Max. application temperature 150°C

1) gültig bei Verwendung von Gegenstecker Federleiste 90° in SMD Ausführung
valid for use by mating female connector 90 ° in SMD version

Copyright by ERNI GmbH
Proprietary notice pursuant to ISO 16016 to be observed.

Information:	Tolerances: All Dimensions in mm	Scale 5:1	
All rights reserved. Only for Information. To ensure that this is the latest version of this drawing, please contact one of the ERNI companies before using.	Subject to modification without prior notice. Drawing will not be updated.	Designation: M 1,27 SRC A, 6-polig BA1	
	ERNI www.ERNI.com	100102460001	K
f / 13.05.2013			A3
Index / Date		Class SRCA	