

ohne Ansaughaube - *without hood*

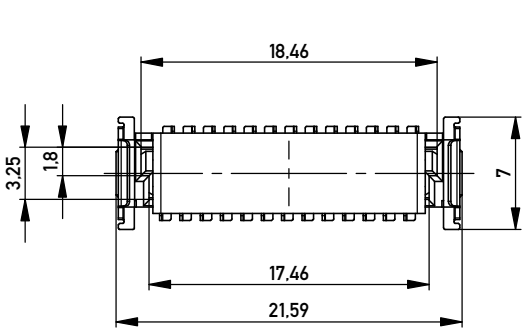

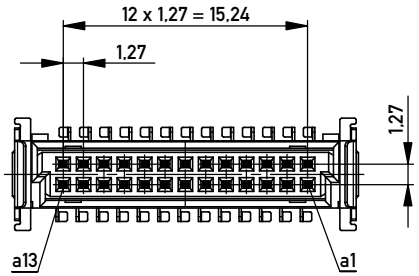

Verpackt in Gurtverpackung
Tape on Reel Packaging
Verpackungseinheit: 280 Stück
Packaging unit: 280 pcs

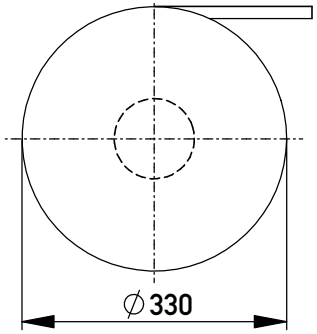

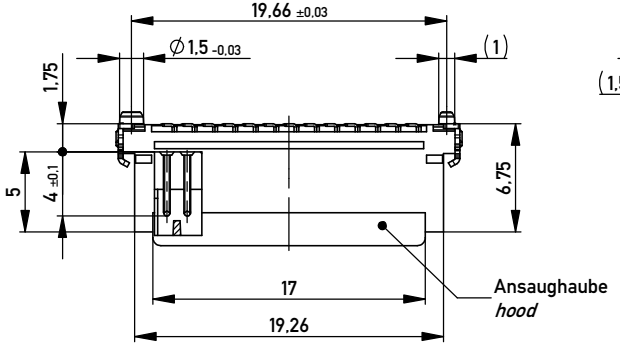

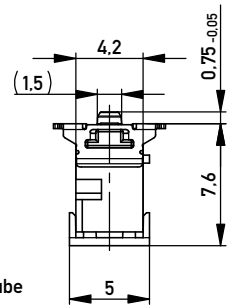

Abspulrichtung - *Reel off Direction*

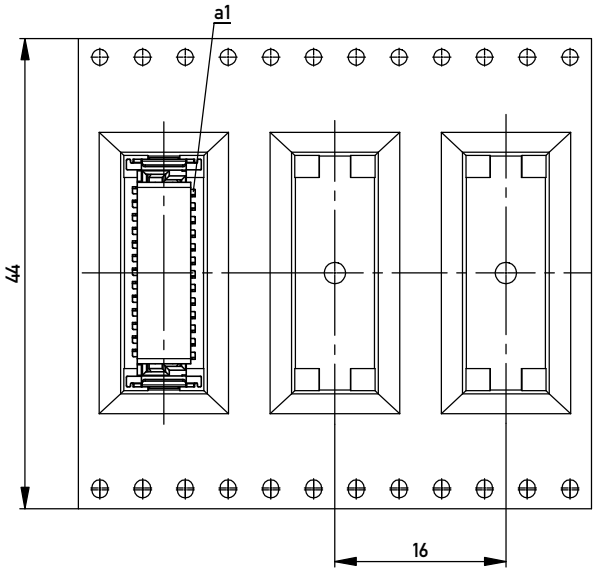

Leiterplatten-Layout Vorschlag für SMT
PCB-Layout Proposal for SMT

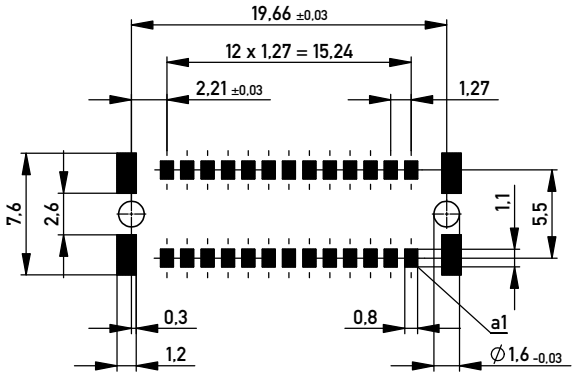

Anforderungsstufe 1
Performance Level 1

Kontaktbereich vergoldet
Mating Area gold plating

Anschlussbereich verzinnt 4-6 µm
Terminal Area 4-6 µm tin plating

Koplanarität der Anschlüsse ≤ 0,1 mm
Coplanarity Area of Termination ≤ 0,1 mm

BA 7-13 - 8mm Bauhöhe
type 7-13 - Low Profile

Information:	Tolerances: All Dimensions in mm	Scale 3:1	
All rights reserved. Only for Information. To ensure that this is the latest version of this drawing, please contact one of the ERNI companies before using.	Subject to modification without prior notice. Drawing will not be updated.	Designation: Messerl. SMC-Q 26-SMD-BA7-13 *Male SMC-Q 26-SMD-type7-13*	
	ERNI www.ERNI.com	100101090002	K
d 23.09.2013			A3
Index Date		Class SMCQ	

Copyright by ERNI GmbH
Proprietary notice pursuant to ISO 16016 to be observed.