Hybrid Couplers

3 dB, 90°

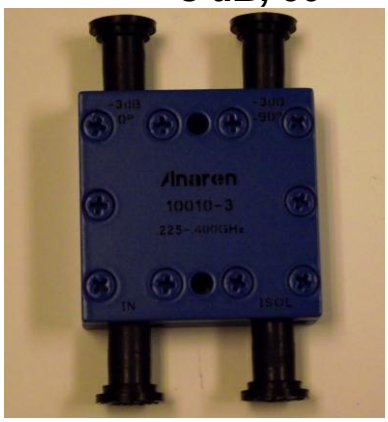

Applications

- Balanced Mixers
- Antenna Feed Networks
- Phasing Networks
- Dividers/Combiners

Features

- Military Grade
- 0.225 – 0.4 GHz
- 2 – Way power Split
- Quadrature
- Connectors Per MIL-C-39012
- Rugged Aluminum Housing
- Low VSWR
- Meets MIL-E-5400 Class 3 Requirements

Outline Drawing

Electrical and Mechanical Specifications subject to change without notice.

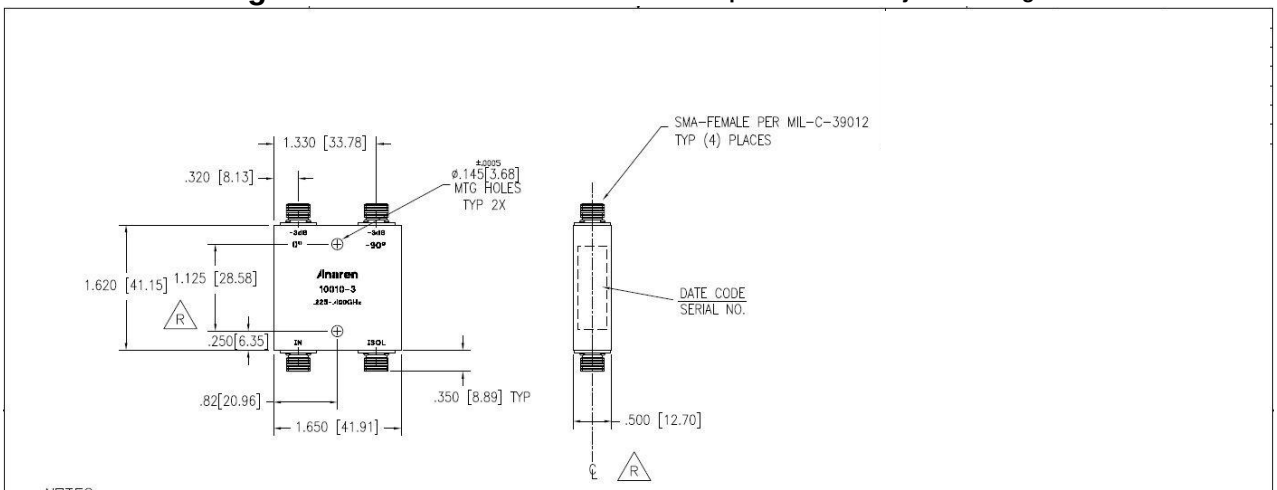

NOTES:
1. DIMENSIONS ARE IN INCHES AND (MILIMETERS)
2. MARKING SHALL BE IN ACCORDANCE WITH MIL-STD-130.
3. FINISH: EPOXY COATING PER MIL-C-22750, COLOR CHIP 35180 (BLUE) PER FED-STD-595, OVER EPOXY PRIMER PER MIL-P-23337.
4. WEIGHT: 2.5 OUNCES (71 GRAMS) MAXIMUM

ELECTRICAL SPECIFICATIONS

FREQ.	225–400 MHz
ISOLATION:	23.0 Db MINIMUM
INSERTION LOSS:	.30 dB MAXIMUM
VSWR:	1.20:1.0 MAXIMUM
AMPLITUDE BALANCE:	±.50 dB MAXIMUM
PHASE BALANCE:	±2.0 DEGREES MAXIMUM
AVG. CW POWER:	250 WATTS

Anaren — ANAREN MICROWAVE INC. EAST SYRACUSE, NEW YORK

COUPLER, 3dB 90° HYB

SIZE	CAGE CODE	DOC NO.	
B	31597	10909-G001	
SCALE 1/1	DOC CODE 3	REV R	SHEET 1 OF 1

USA/Canada: (315) 432-8909
Toll Free: (800) 411-6596
Europe: +44 2392-232392

Typical Test Data Plots

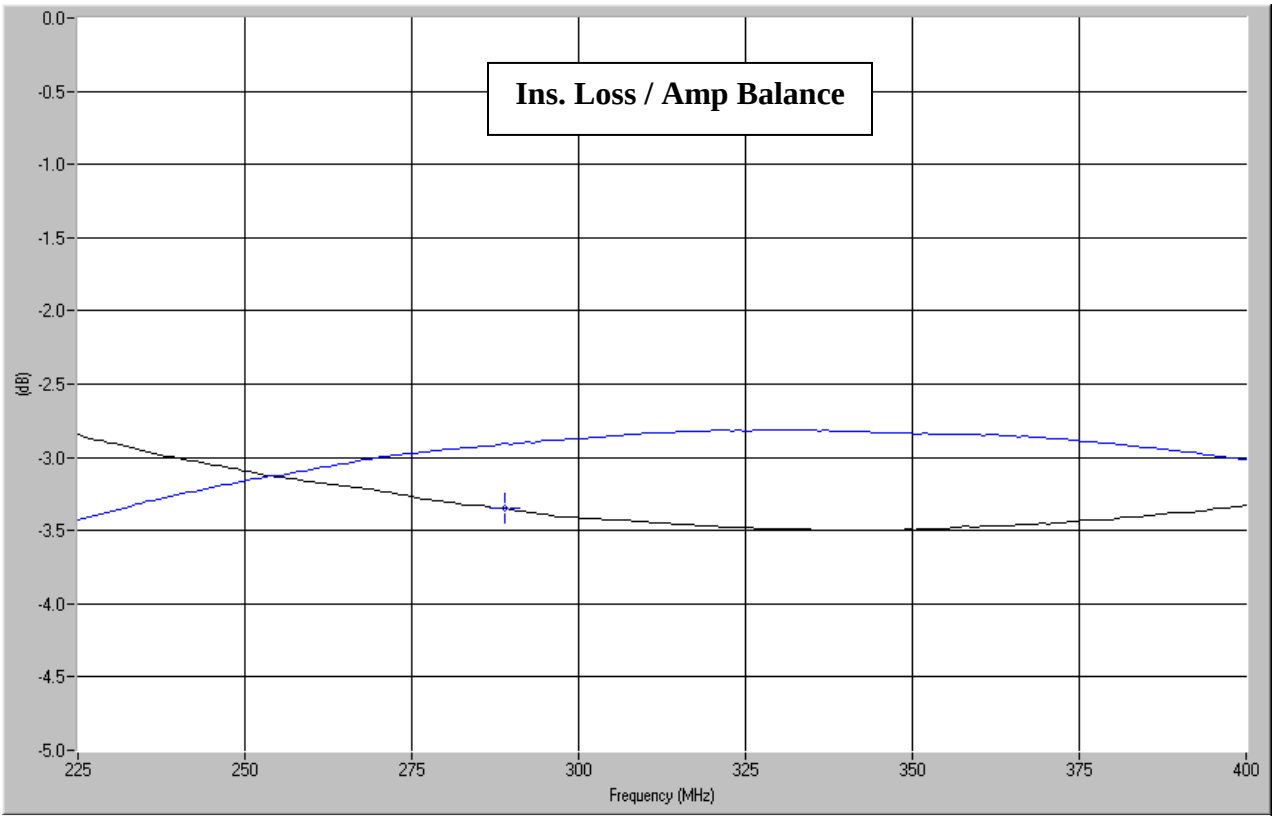

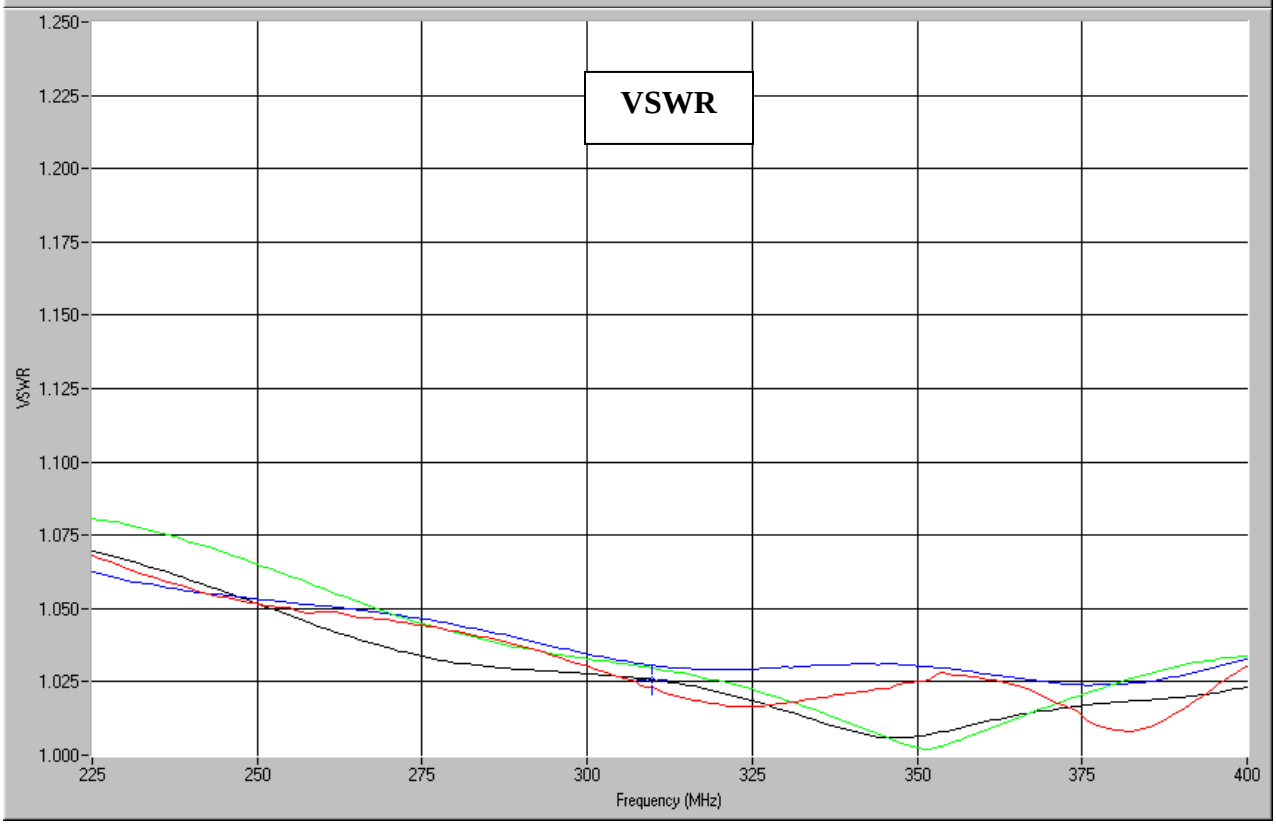

USA/Canada: (315) 432-8909
Toll Free: (800) 411-6596
Europe: +44 2392-232392

Typical Test Data Plots

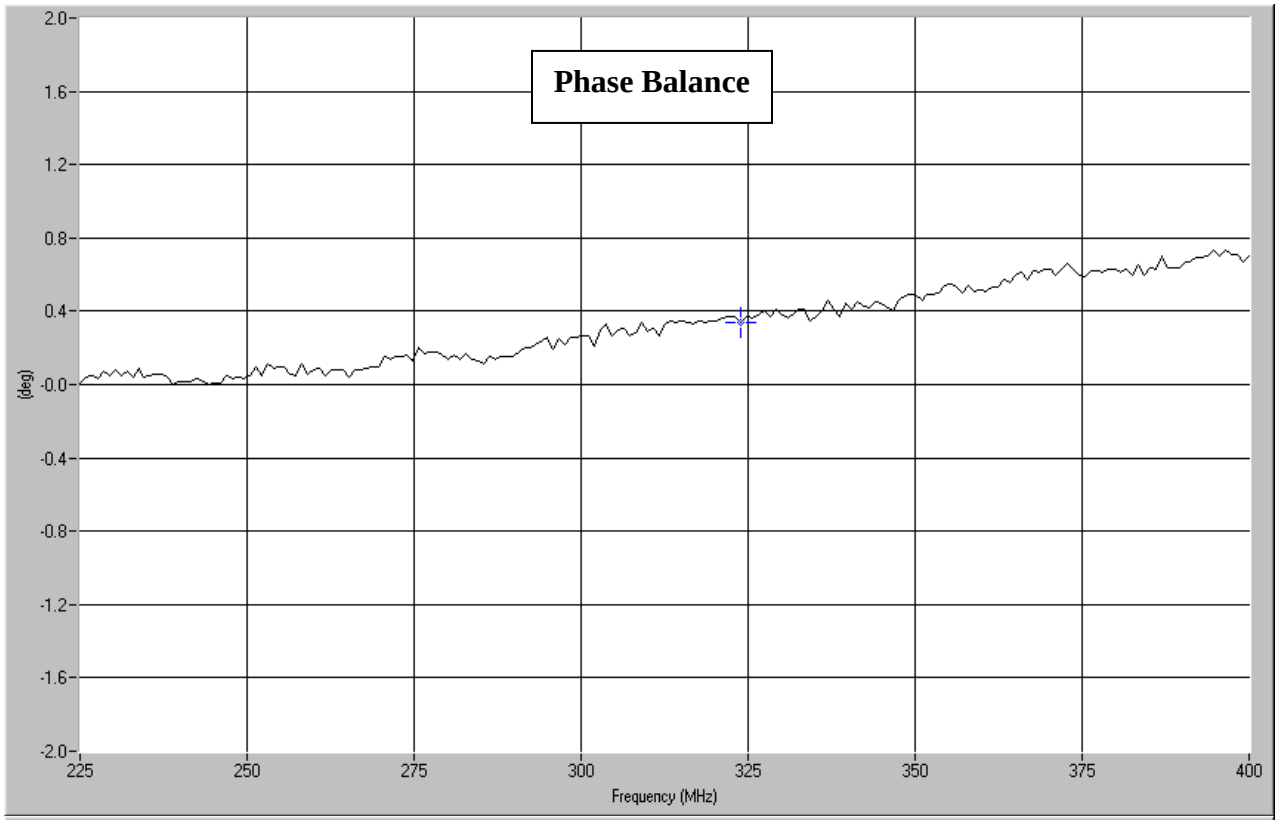

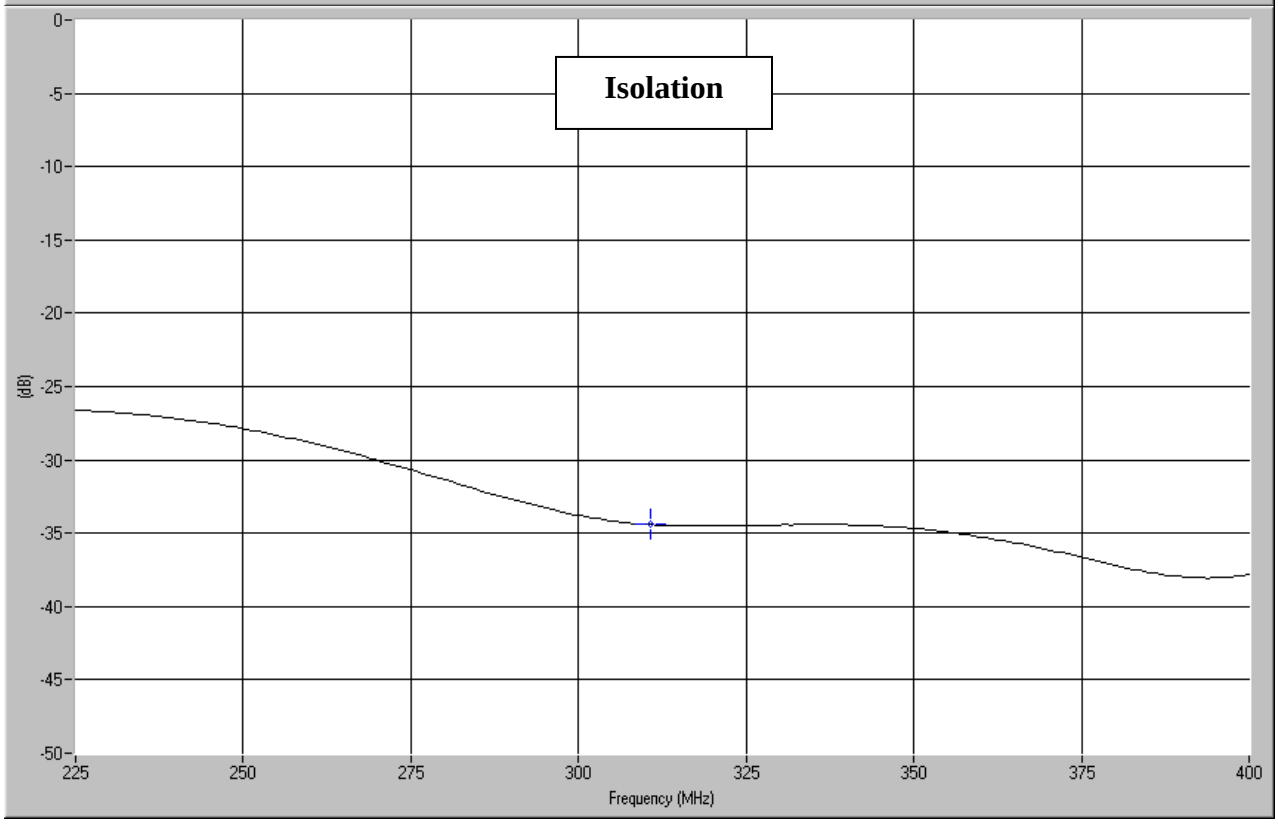

USA/Canada: (315) 432-8909
Toll Free: (800) 411-6596
Europe: +44 2392-232392

Mouser Electronics

Authorized Distributor

Click to View Pricing, Inventory, Delivery & Lifecycle Information:

Anaren:
10010-3