DASH NO.	M CODE	MADE FROM

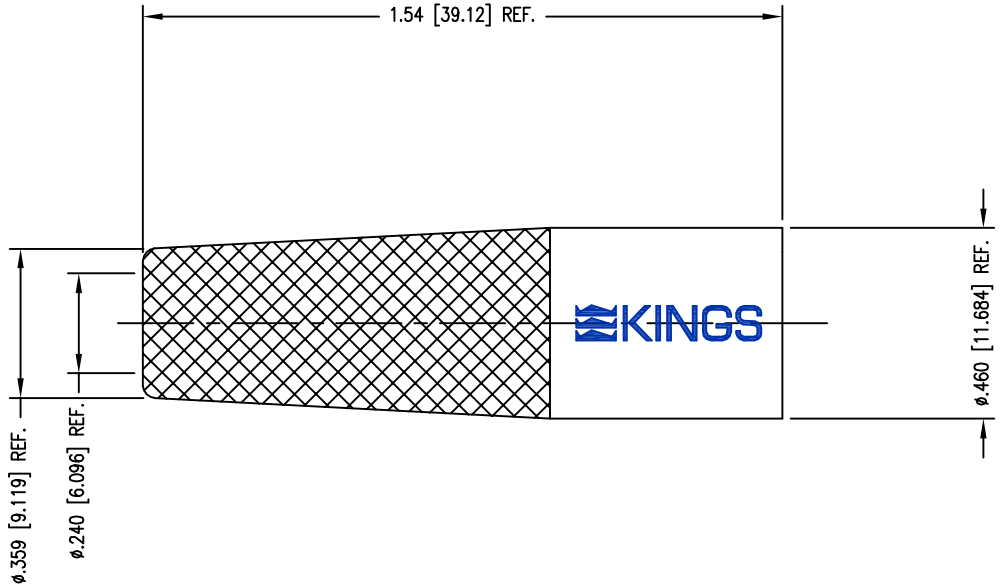

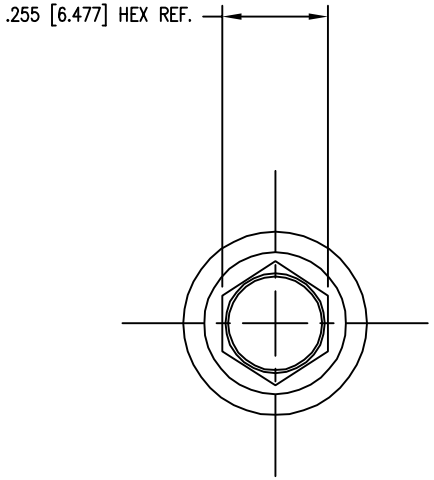

NOTES:
1. MATERIAL: RUBBER, BUNA N
2. BOOT USED ON RG-59 CABLE ASSEMBLY
3. DIMENSIONS ARE IN INCHES [MM].

PART NUMBER	COLOR
1-8577-1 QD	BROWN
1-8577-2 QD	RED
1-8577-3 QD	ORANGE
1-8577-4 QD	YELLOW
1-8577-5 QD	GREEN
1-8577-6 QD	BLUE
1-8577-7 QD	VIOLET
1-8577-8 QD	GREY
1-8577-9 QD	WHITE
1-8577-10 QD	BLACK

SD1-8577 QD

REVISIONS	
ISSUE	CHANGES
4	CN 39593 E JPK 08/24/06
5	CN 39671 C JPK 10/24/06
6	CN 39686 C HVN 11/06/06
H	REVISED PER ER22925 GGR 03/26/2010
J	REVISED PER ER041697 TZ 05/15/2012
K	REVISED PER ER042364 TZ 06/12/2012

CUSTOMER SALES DRAWING

SCALE 3:1

APPROX SURFACE AREA

WAS E-20290-5

USED ON

REF:

BOOT FOR RG59 CABLE

DRAWN JLA	DATE 03/07/05
DESIGN JLA	DATE 03/07/05
APPR.	DATE

KINGS by WINCHESTER
Winchester Electronics
62 Barnes Industrial Road North
Wallingford, CT 06492

SD1-8577 QD