THIS DRAWING IS UNPUBLISHED. RELEASED FOR PUBLICATION 20
© COPYRIGHT 20 BY - ALL RIGHTS RESERVED.

LOC	DIST
CM	00

REVISIONS

P	LTR	DESCRIPTION	DATE	DWN	APVD
	J	REVISED PER ECO-15-003291	27JULY2015	SC	DZ

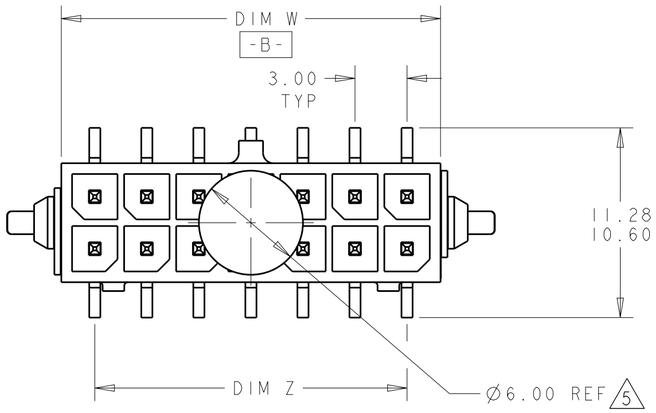

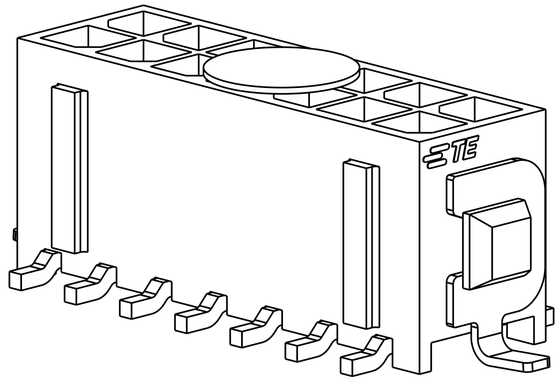

SCALE 6:1

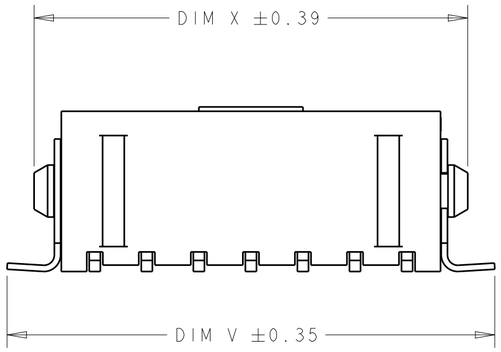

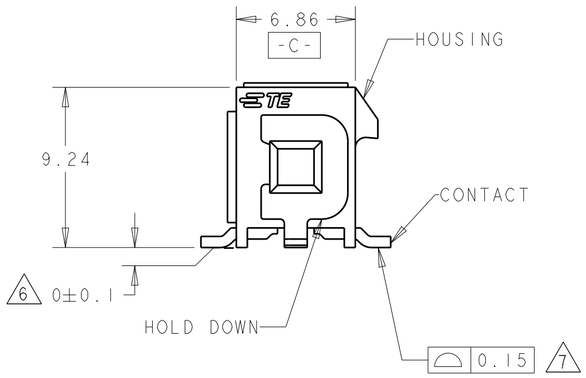

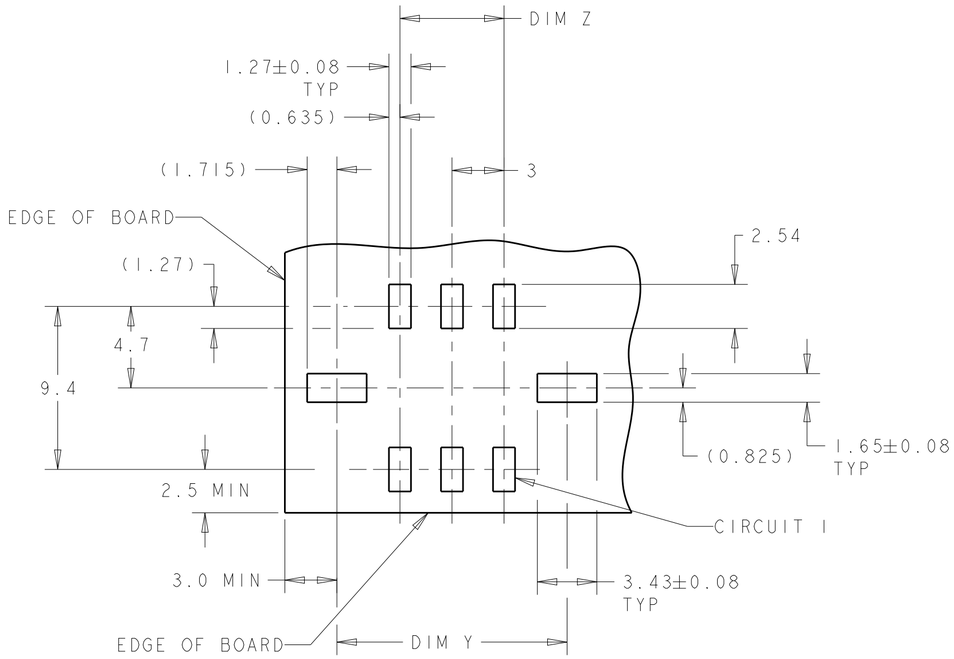

RECOMMENDED PCB LAYOUT 4
(COMPONENT SIDE)

1 MATERIAL:
CONTACTS - BRASS.
HOUSING - UL 94V-0 RATED HIGH TEMP NYLON, COLOR; BLACK.
HOLD DOWNS - PHOSPHOR BRONZE.

2 FINISH:
CONTACTS - 2.54µm MINIMUM TIN-LEAD OVER 1.27µm MINIMUM NICKEL.
HOLD DOWNS - 2.54µm TIN LEAD.

4 RECOMMENDED PC BOARD THICKNESS OF 1.57.

5 KAPTON VACUUM PICK UP BUTTON.

6 DIMENSION APPLIES TO SOLDERTAIL SURFACES AND STANDOFF SURFACES.

7 ALL SOLDERTAILS AND HOLD DOWNS.

8 FINISH:
CONTACTS - 2.54µm MINIMUM MATTE TIN OVER 1.27µm MINIMUM NICKEL.
HOLD DOWNS - 2.54µm MATTE TIN.

FINISH	DIM V	DIM W	DIM Y	DIM Z	DIM X	NO. OF POSN.	ASSEMBLY
8	43.04	36.86	40.27	33.00	40.00	24	5-794636-4
	40.04	33.86	37.27	30.00	37.00	22	5-794636-2
	37.04	30.86	34.27	27.00	34.00	20	5-794636-0
	34.04	27.86	31.27	24.00	31.00	18	4-794636-8
	31.04	24.86	28.27	21.00	28.00	16	4-794636-6
	28.04	21.86	25.27	18.00	25.00	14	4-794636-4
	25.04	18.86	22.27	15.00	22.00	12	4-794636-2
	22.04	15.86	19.27	12.00	19.00	10	4-794636-0
	19.04	12.86	16.27	9.00	16.00	8	3-794636-8
	16.04	9.86	13.27	6.00	13.00	6	3-794636-6
	13.04	6.86	10.27	3.00	10.00	4	3-794636-4
	10.04	3.86	7.27	-	7.00	2	3-794636-2
2	43.04	36.86	40.27	33.00	40.00	24	2-794636-4
	40.04	33.86	37.27	30.00	37.00	22	2-794636-2
	37.04	30.86	34.27	27.00	34.00	20	2-794636-0
	34.04	27.86	31.27	24.00	31.00	18	1-794636-8
	31.04	24.86	28.27	21.00	28.00	16	1-794636-6
	28.04	21.86	25.27	18.00	25.00	14	1-794636-4
	25.04	18.86	22.27	15.00	22.00	12	1-794636-2
	22.04	15.86	19.27	12.00	19.00	10	1-794636-0
	19.04	12.86	16.27	9.00	16.00	8	794636-8
	16.04	9.86	13.27	6.00	13.00	6	794636-6
	13.04	6.86	10.27	3.00	10.00	4	794636-4
	10.04	3.86	7.27	-	7.00	2	794636-2

THIS DRAWING IS A CONTROLLED DOCUMENT.

DIMENSIONS: mm

TOLERANCES UNLESS OTHERWISE SPECIFIED:
0 PLC ±-
1 PLC ±-
2 PLC ±0.13
3 PLC ±-
4 PLC ±-
ANGLES ±

MATERIAL 1

FINISH SEE TABLE

METRIC

DWN	S. HOOVER	23-MAR-2005
CHK	C. JONES	23-MAR-2005
APVD	C. JONES	23-MAR-2005
PRODUCT SPEC	-	
APPLICATION SPEC	-	
WEIGHT	-	

TE Connectivity

NAME
SURFACE MOUNT, VERTICAL, MECHANICAL HOLD DOWN, ASSEMBLY, TIN HEADER, DUAL ROW, MICRO MATE-N-LOK (TM)

SIZE	CAGE CODE	DRAWING NO	RESTRICTED TO
A2	00779	C-794636	-

CUSTOMER DRAWING | SCALE 4:1 | SHEET 1 OF 1 | REV J

794636