DRAWING MADE IN THIRD ANGLE PROJECTION

THIS DRAWING IS UNPUBLISHED. RELEASED FOR PUBLICATION ,19 .

© COPYRIGHT 19 BY AMP INCORPORATED. ALL INTERNATIONAL RIGHTS RESERVED.

LOC	DIST	P	F
CM	53		

REVISIONS

ZONE	LTR	DESCRIPTION	DATE	APPD
	E	REV PER ECN CM-3994	12-18-92	NG / RS

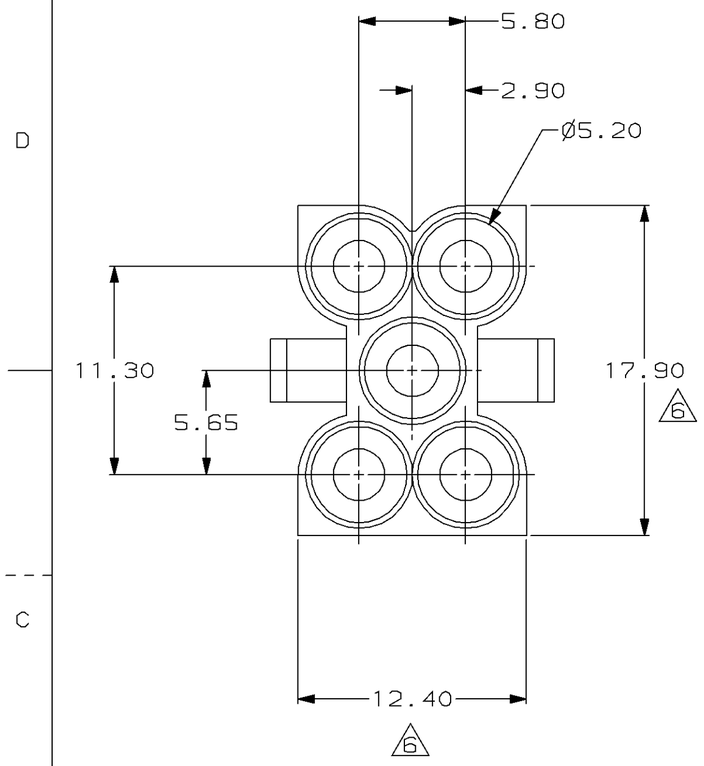

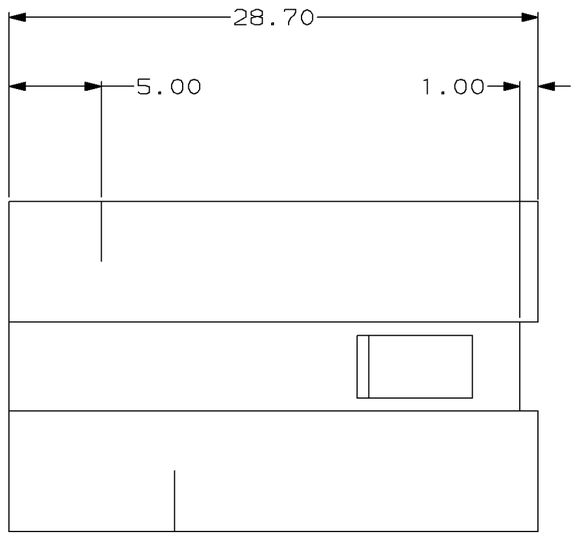

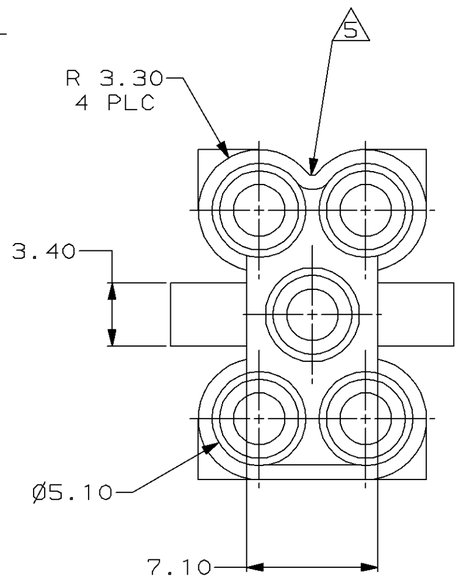

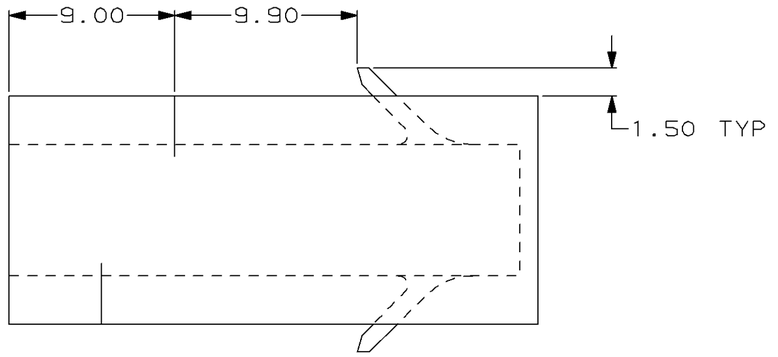

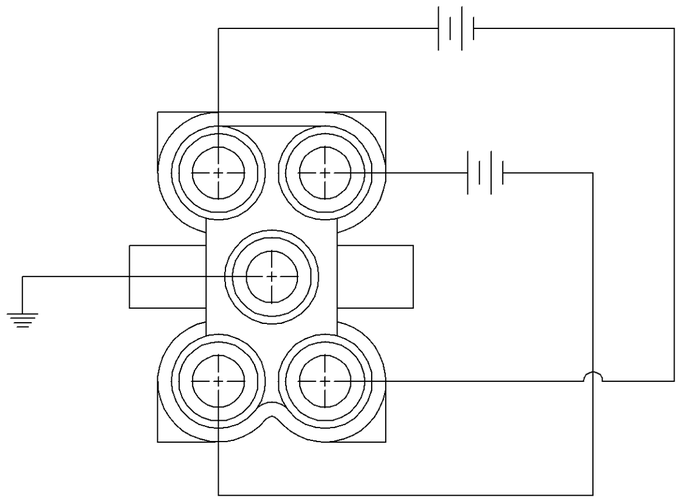

FIGURE 1-1

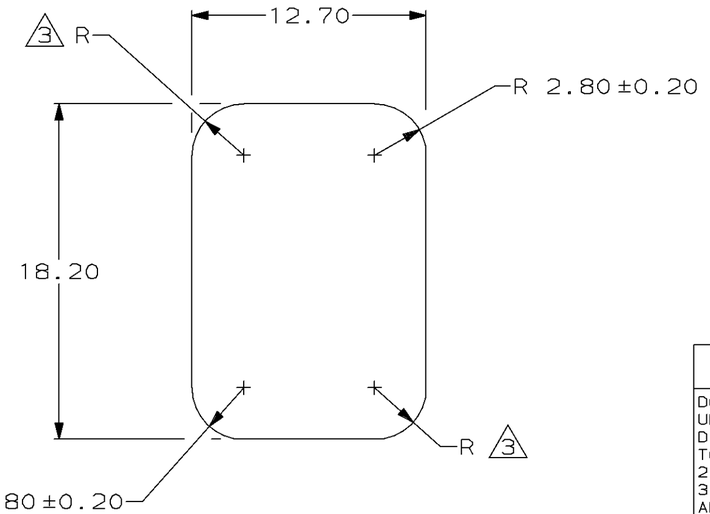

PIN HOUSING CUT OUT

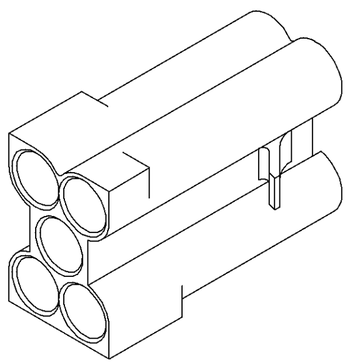

THIS HOUSING TO BE INSTALLED IN SUBBASE

1. ACCEPTS MATE-N-LOK™ PIN 350218 IN CORNER CIRCUITS, AND GROUND PIN 350654 IN CENTER CIRCUIT.
2. CENTER GROUND PIN RECESSED 1.50 MIN AT MATING END; 3.10 MIN. AT BACK END. OTHER 4 PINS RECESSED 3.30 MIN AT MATING END; 3.80 MIN AT BACK END.

△3 FOR SUB-BASES 1,2, OR 3 RADII TO BE 0.20 MAX. FOR SUB-BASES 4,5, OR 6 RADII TO BE 2.80±0.20.

4. CAUTION: THIS CONNECTOR IS NOT POLARIZED. IT HAS BEEN DESIGNED IN ACCORDANCE WITH THE INTERNATIONAL ORGANIZATION FOR STANDARDIZATION DESIGN DEPICTED IN DOCUMENT 5599/III DATED 4-27-77 UNDER RESOLUTION 59 OF ISO/TC 131/SC5/WG 3. INTENDED USE IS AS SHOWN IN FIGURE 1-1.

△5 VISUAL POLARIZING FEATURE.

△6 DIMENSION INDICATED IS AS MOLDED. ADDITIONAL GROWTH DUE TO SUBSEQUENT MOISTURE ABSORPTION MAY occur.

640405

METRIC

THIS DRAWING IS A CONTROLLED DOCUMENT FOR AMP INCORPORATED. IT IS SUBJECT TO CHANGE AND THE CONTROLLING ENGINEERING ORGANIZATION SHOULD BE CONTACTED FOR THE LATEST REVISION.

1-640405-0

PART NO

DO NOT SCALE PRINT. UNLESS SPECIFIED DIMENSIONS IN mm [INCHES] TOLERANCES ON : 2 PLC DEC ± 0.10 3 PLC DEC ± - ANGLES ± -	DR 11-30-92 K. WHITAKER	AMP Incorporated Harrisburg, PA 17105-3608	
	CHK 11-30-92 R. SWING		
	APPD 12-11-92 D. SELF	NAME VALVE CONNECTOR, PIN HOUSING, 5 CIRCUIT, UNIVERSAL MATE-N-LOK™	
MATERIAL NYLON, UL 94V-2 NATURAL	APPD 12-11-92 D. SELF		
	PRODUCT SPEC -		
FINISH -	APPLICATION SPEC -	SIZE C / CAGE CODE 00779	DRAWING NO C-640405
	WEIGHT -	SCALE 4:1	SHEET 1 OF 1

CUSTOMER DRAWING

AMP 1471-6 REV 3-92

'A/C BUSINESS GROUP' 3323 177-34 'NICK GANNON'

18 DEC 1992 08:36:49 AMPT0879 <CE079B>DEPT3323>AMPT0879>U.CM-3994