1.5KE-G Series

Stand-off Voltage: 6.8 ~ 600V
Power Dissipation: 1500 Watts
RoHS Device

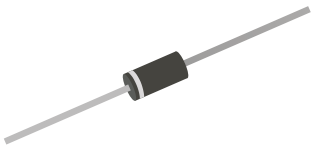

Features

-Glass passivated chip.

-Low leakage.

-1500W peak pulse power capability with a 10/1000μs waveform, repetitive rate (duty cycle): 0.01%.

-Uni and Bidirectional unit.

-Excellent clamping capability.

-Very fast response time.

DO-201

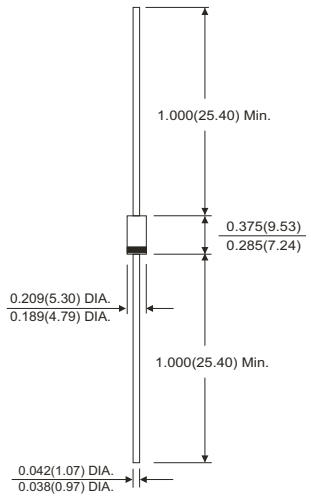

Dimensions in inches and (millimeter)

Mechanical Data

-Case: Molded plastic DO-201

-Epoxy: UL 94V-0 rate flame retardant

-Terminals: Axial leads, solderable per MIL-STD-202, Method 208 guranteed

-Polarity: Color band denotes cathode end except Bipolar

-Mounting position: Any

-Approx. weight: 0.844 grams

Maximum Ratings and Electrical Characteristics (TA=25°C unless otherwise noted)

Parameter	Symbol	Value	Unit
Peak power dissipation with a 10/1000μs waveform (Note 1)	P_{PP}	1500	W
Peak pulse current with a 10/1000μs waveform (Note 1)	I_{PP}	See Next Table	A
Power dissipation on infinite heatsink at T_L=75°C	P_D	6.5	W
Peak forward surge current, 8.3ms single half sine-wave unidirectional only (JEDEC method) (Note 2)	I_{FSM}	200	A
Maximum instantaneous forward voltage at 100 A for unidirectional only(Note 3)	V_F	3.5/5.0	V
Operating junction and storage temperature range	T_J, T_{STG}	-55 to +150	°C

NTOES:
(1) Non-repetitive current pulse, per fig.5 and derated above T_A=25°C per fig.1
(2) Measured on 8.3ms single half sine-wave or equivalent square wave, equare wave, duty cycle=4 pulses per minute maximum
(3) V_F<3.5V for devices of V_{BR}<200V and V_F<5.0V for devices of V_{BR}>201V

RATING AND CHARACTERISTIC CURVES (1.5KE6.8-G Thru. 1.5KE600-G)

Fig.1- Pulse Derating Curve

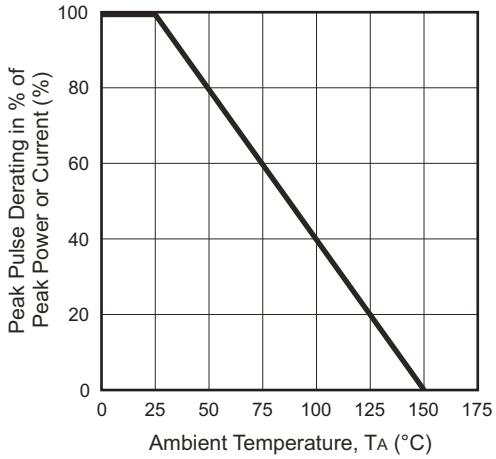

Fig.2- Steady State Power Derating Curve

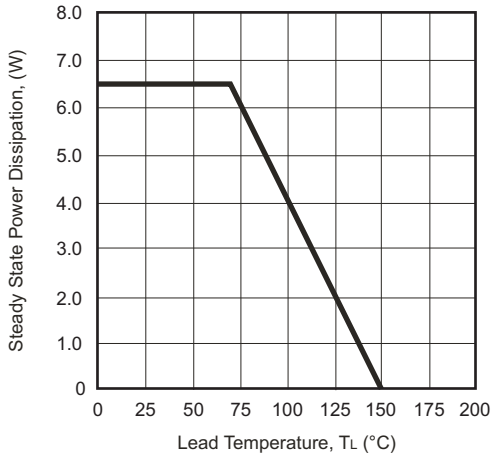

Fig.3- Max. Non-repetitive Surge Current

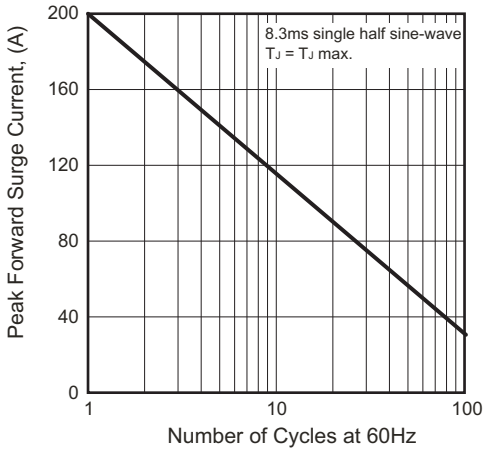

Fig.4- Typical Junction Capacitance

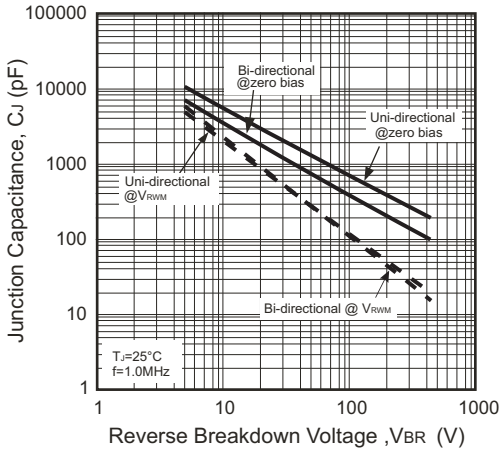

Fig.5- Pulse Waveform

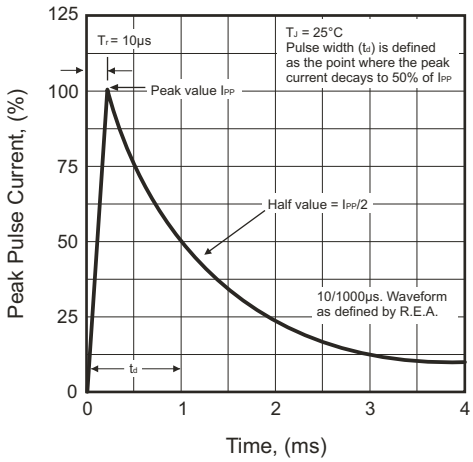

Fig.6- Peak Pulse Power Rating Curve

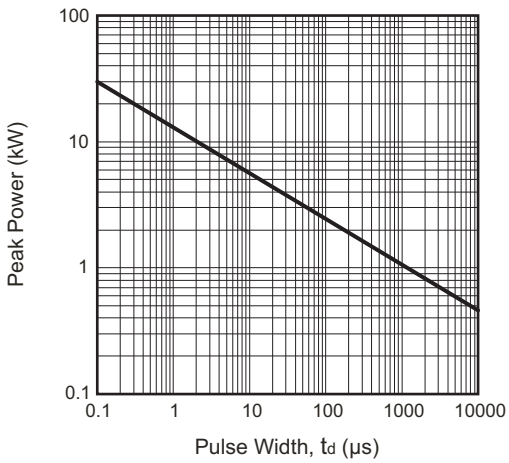

Electrical Characteristics (1.5KE6.8-G Thru. 1.5KE600-G)

Part No.	Breakdown Voltage V_{BR} (V) @ I_T			Working Peak Reverse Voltage V_{RWM} (V)	Maximum Reverse Leakage at V_{RWM} I_R (uA)	Maximum Reverse Surge Current I_{PP}(A)	Maximum Clamping Voltage Vc(V)	Marking Code	
	MIN.(V)	MAX.(V)	I_T(mA)					UNI	BI
1.5KE6.8(C)-G	6.12	7.48	10	5.5	1000	138.89	10.8	1.5KE6.8	1.5KE6.8C
1.5KE6.8(C)A-G	6.46	7.14	10	5.8	1000	142.86	10.5	1.5KE6.8A	1.5KE6.8CA
1.5KE7.5(C)-G	6.75	8.25	10	6.1	500	128.21	11.7	1.5KE7.5	1.5KE7.5C
1.5KE7.5(C)A-G	7.13	7.88	10	6.4	500	132.74	11.3	1.5KE7.5A	1.5KE7.5CA
1.5KE8.2(C)-G	7.38	9.02	10	6.6	200	120.00	12.5	1.5KE8.2	1.5KE8.2C
1.5KE8.2(C)A-G	7.79	8.61	10	7.0	200	123.97	12.1	1.5KE8.2A	1.5KE8.2CA
1.5KE9.1(C)-G	8.19	10.01	1.0	7.4	50	108.70	13.8	1.5KE9.1	1.5KE9.1C
1.5KE9.1(C)A-G	8.65	9.56	1.0	7.8	50	111.94	13.4	1.5KE9.1A	1.5KE9.1CA
1.5KE10(C)-G	9.00	11.00	1.0	8.1	10	100.00	15.0	1.5KE10	1.5KE10C
1.5KE10(C)A-G	9.50	10.50	1.0	8.6	10	103.45	14.5	1.5KE10A	1.5KE10CA
1.5KE11(C)-G	9.90	12.10	1.0	8.9	5.0	92.59	16.2	1.5KE11	1.5KE11C
1.5KE11(C)A-G	10.45	11.55	1.0	9.4	5.0	96.15	15.6	1.5KE11A	1.5KE11CA
1.5KE12(C)-G	10.80	13.20	1.0	9.7	5.0	86.71	17.3	1.5KE12	1.5KE12C
1.5KE12(C)A-G	11.40	12.60	1.0	10.2	5.0	89.82	16.7	1.5KE12A	1.5KE12CA
1.5KE13(C)-G	11.70	14.30	1.0	10.5	5.0	78.95	19.0	1.5KE13	1.5KE13C
1.5KE13(C)A-G	12.35	13.65	1.0	11.1	5.0	82.42	18.2	1.5KE13A	1.5KE13CA
1.5KE15(C)-G	13.50	16.50	1.0	12.1	5.0	68.18	22.0	1.5KE15	1.5KE15C
1.5KE15(C)A-G	14.25	15.75	1.0	12.8	5.0	70.75	21.2	1.5KE15A	1.5KE15CA
1.5KE16(C)-G	14.40	17.60	1.0	12.9	5.0	63.83	23.5	1.5KE16	1.5KE16C
1.5KE16(C)A-G	15.20	16.80	1.0	13.6	5.0	66.67	22.5	1.5KE16A	1.5KE16CA
1.5KE18(C)-G	16.20	19.80	1.0	14.5	5.0	56.60	26.5	1.5KE18	1.5KE18C
1.5KE18(C)A-G	17.10	18.90	1.0	15.3	5.0	59.52	25.2	1.5KE18A	1.5KE18CA
1.5KE20(C)-G	18.00	22.00	1.0	16.2	5.0	51.55	29.1	1.5KE20	1.5KE20C
1.5KE20(C)A-G	19.00	21.00	1.0	17.1	5.0	54.15	27.7	1.5KE20A	1.5KE20CA
1.5KE22(C)-G	19.80	24.20	1.0	17.8	5.0	47.02	31.9	1.5KE22	1.5KE22C
1.5KE22(C)A-G	20.90	23.10	1.0	18.8	5.0	49.02	30.6	1.5KE22A	1.5KE22CA
1.5KE24(C)-G	21.60	26.40	1.0	19.4	5.0	43.23	34.7	1.5KE24	1.5KE24C
1.5KE24(C)A-G	22.80	25.20	1.0	20.5	5.0	45.18	33.2	1.5KE24A	1.5KE24CA
1.5KE27(C)-G	24.30	29.70	1.0	21.8	5.0	38.36	39.1	1.5KE27	1.5KE27C
1.5KE27(C)A-G	25.65	28.35	1.0	23.1	5.0	40.00	37.5	1.5KE27A	1.5KE27CA
1.5KE30(C)-G	27.00	33.00	1.0	24.3	5.0	34.48	43.5	1.5KE30	1.5KE30C
1.5KE30(C)A-G	28.50	31.50	1.0	25.6	5.0	36.23	41.4	1.5KE30A	1.5KE30CA
1.5KE33(C)-G	29.70	36.30	1.0	26.8	5.0	31.45	47.7	1.5KE33	1.5KE33C
1.5KE33(C)A-G	31.35	34.65	1.0	28.2	5.0	32.82	45.7	1.5KE33A	1.5KE33CA
1.5KE36(C)-G	32.40	39.60	1.0	29.1	5.0	28.85	52.0	1.5KE36	1.5KE36C
1.5KE36(C)A-G	34.20	37.80	1.0	30.8	5.0	30.06	49.9	1.5KE36A	1.5KE36CA
1.5KE39(C)-G	35.10	42.90	1.0	31.6	5.0	26.60	56.4	1.5KE39	1.5KE39C
1.5KE39(C)A-G	37.05	40.95	1.0	33.3	5.0	27.83	53.9	1.5KE39A	1.5KE39CA
1.5KE43(C)-G	38.70	47.30	1.0	34.8	5.0	24.23	61.9	1.5KE43	1.5KE43C
1.5KE43(C)A-G	40.85	45.15	1.0	36.8	5.0	25.30	59.3	1.5KE43A	1.5KE43CA
1.5KE47(C)-G	42.30	51.70	1.0	38.1	5.0	22.12	67.8	1.5KE47	1.5KE47C
1.5KE47(C)A-G	44.65	49.35	1.0	40.2	5.0	23.15	64.8	1.5KE47A	1.5KE47CA
1.5KE51(C)-G	45.90	56.10	1.0	41.3	5.0	20.41	73.5	1.5KE51	1.5KE51C
1.5KE51(C)A-G	48.45	53.55	1.0	43.6	5.0	21.40	70.1	1.5KE51A	1.5KE51CA
1.5KE56(C)-G	50.40	61.60	1.0	45.4	5.0	18.63	80.5	1.5KE56	1.5KE56C
1.5KE56(C)A-G	53.20	58.80	1.0	47.8	5.0	19.48	77.0	1.5KE56A	1.5KE56CA
1.5KE62(C)-G	55.80	68.20	1.0	50.2	5.0	16.85	89.0	1.5KE62	1.5KE62C
1.5KE62(C)A-G	58.90	65.10	1.0	53.0	5.0	17.65	85.0	1.5KE62A	1.5KE62CA

1500W Transient Voltage Suppressor

Comchip
SMD Diode Specialist

Electrical Characteristics (1.5KE6.8-G Thru. 1.5KE600-G)

Part No.	Breakdown Voltage V_{BR} (V) @ I_T			Working Peak Reverse Voltage V_{RWM} (V)	Maximum Reverse Leakage at V_{RWM} I_R (uA)	Maximum Reverse Surge Current I_{PP}(A)	Maximum Clamping Voltage Vc(V)	Marking Code	
	MIN.(V)	MAX.(V)	I_T(mA)					UNI	BI
1.5KE68(C)-G	61.20	74.80	1.0	55.1	5.0	15.31	98.0	1.5KE68	1.5KE68C
1.5KE68(C)A-G	64.60	71.40	1.0	58.1	5.0	16.30	92.0	1.5KE68A	1.5KE68CA
1.5KE75(C)-G	67.50	82.50	1.0	60.7	5.0	13.89	108.0	1.5KE75	1.5KE75C
1.5KE75(C)A-G	71.25	78.75	1.0	64.1	5.0	14.56	103.0	1.5KE75A	1.5KE75CA
1.5KE82(C)-G	73.80	90.20	1.0	66.4	5.0	12.71	118.0	1.5KE82	1.5KE82C
1.5KE82(C)A-G	77.90	86.10	1.0	70.1	5.0	13.27	113.0	1.5KE82A	1.5KE82CA
1.5KE91(C)-G	81.90	100.10	1.0	73.7	5.0	11.45	131.0	1.5KE91	1.5KE91C
1.5KE91(C)A-G	86.45	95.55	1.0	77.8	5.0	12.00	125.0	1.5KE91A	1.5KE91CA
1.5KE100(C)-G	90.00	110.00	1.0	81.0	5.0	10.42	144.0	1.5KE100	1.5KE100C
1.5KE100(C)A-G	95.00	105.00	1.0	85.5	5.0	10.95	137.0	1.5KE100A	1.5KE100CA
1.5KE110(C)-G	99.00	121.00	1.0	89.2	5.0	9.49	158.0	1.5KE110	1.5KE110C
1.5KE110(C)A-G	104.50	115.50	1.0	94.0	5.0	9.87	152.0	1.5KE110A	1.5KE110CA
1.5KE120(C)-G	108.00	132.00	1.0	97.2	5.0	8.67	173.0	1.5KE120	1.5KE120C
1.5KE120(C)A-G	114.00	126.00	1.0	102.0	5.0	9.09	165.0	1.5KE120A	1.5KE120CA
1.5KE130(C)-G	117.00	143.00	1.0	105.0	5.0	8.02	187.0	1.5KE130	1.5KE130C
1.5KE130(C)A-G	123.50	136.50	1.0	111.0	5.0	8.38	179.0	1.5KE130A	1.5KE130CA
1.5KE150(C)-G	135.00	165.00	1.0	121.0	5.0	6.98	215.0	1.5KE150	1.5KE150C
1.5KE150(C)A-G	142.50	157.50	1.0	128.0	5.0	7.25	207.0	1.5KE150A	1.5KE150CA
1.5KE160(C)-G	144.00	176.00	1.0	130.0	5.0	6.52	230.0	1.5KE160	1.5KE160C
1.5KE160(C)A-G	152.00	168.00	1.0	136.0	5.0	6.85	219.0	1.5KE160A	1.5KE160CA
1.5KE170(C)-G	153.00	187.00	1.0	138.0	5.0	6.15	244.0	1.5KE170	1.5KE170C
1.5KE170(C)A-G	161.50	178.50	1.0	145.0	5.0	6.41	234.0	1.5KE170A	1.5KE170CA
1.5KE180(C)-G	162.00	198.00	1.0	146.0	5.0	5.81	258.0	1.5KE180	1.5KE180C
1.5KE180(C)A-G	171.00	189.00	1.0	154.0	5.0	6.10	246.0	1.5KE180A	1.5KE180CA
1.5KE200(C)-G	180.00	220.00	1.0	162.0	5.0	5.23	287.0	1.5KE200	1.5KE200C
1.5KE200(C)A-G	190.00	210.00	1.0	171.0	5.0	5.47	274.0	1.5KE200A	1.5KE200CA
1.5KE220(C)-G	198.00	242.00	1.0	175.0	5.0	4.36	344.0	1.5KE220	1.5KE220C
1.5KE220(C)A-G	209.00	231.00	1.0	185.0	5.0	4.57	328.0	1.5KE220A	1.5KE220CA
1.5KE250(C)-G	225.00	275.00	1.0	202.0	5.0	4.17	360.0	1.5KE250	1.5KE250C
1.5KE250(C)A-G	237.50	262.50	1.0	214.0	5.0	4.36	344.0	1.5KE250A	1.5KE250CA
1.5KE300(C)-G	270.00	330.00	1.0	243.0	5.0	3.49	430.0	1.5KE300	1.5KE300C
1.5KE300(C)A-G	285.00	315.00	1.0	256.0	5.0	3.62	414.0	1.5KE300A	1.5KE300CA
1.5KE350(C)-G	315.00	385.00	1.0	284.2	5.0	2.98	504.0	1.5KE350	1.5KE350C
1.5KE350(C)A-G	332.50	367.50	1.0	299.3	5.0	3.11	482.0	1.5KE350A	1.5KE350CA
1.5KE380(C)-G	342.00	418.00	1.0	308.6	5.0	2.74	547.2	1.5KE380	1.5KE380C
1.5KE380(C)A-G	361.00	399.00	1.0	324.9	5.0	2.86	524.4	1.5KE380A	1.5KE380CA
1.5KE400(C)-G	360.00	440.00	1.0	324.8	5.0	2.60	574.0	1.5KE400	1.5KE400C
1.5KE400(C)A-G	380.00	420.00	1.0	342.0	5.0	2.72	548.0	1.5KE400A	1.5KE400CA
1.5KE440(C)-G	396.00	484.00	1.0	357.3	5.0	2.37	631.0	1.5KE440	1.5KE440C
1.5KE440(C)A-G	418.00	462.00	1.0	376.2	5.0	2.47	602.0	1.5KE440A	1.5KE440CA
1.5KE500(C)-G	450.00	550.00	1.0	406.0	5.0	2.08	720.0	1.5KE500	1.5KE500C
1.5KE500(C)A-G	475.00	525.00	1.0	427.5	5.0	2.17	690.0	1.5KE500A	1.5KE500CA
1.5KE520(C)-G	468.00	572.00	1.0	422.2	5.0	2.00	748.8	1.5KE520	1.5KE520C
1.5KE520(C)A-G	494.00	546.00	1.0	444.6	5.0	2.09	717.6	1.5KE520A	1.5KE520CA
1.5KE550(C)-G	495.00	605.00	1.0	446.6	5.0	1.89	792.0	1.5KE550	1.5KE550C
1.5KE550(C)A-G	522.50	577.50	1.0	470.3	5.0	1.98	759.0	1.5KE550A	1.5KE550CA
1.5KE600(C)-G	540.00	660.00	1.0	487.2	5.0	1.74	864.0	1.5KE600	1.5KE600C
1.5KE600(C)A-G	570.00	630.00	1.0	513.0	5.0	1.81	828.0	1.5KE600A	1.5KE600CA

Notes: 1. Suffix A denotes 5% tolerance devices. Without A denotes 10% tolerance devices.
2. Add suffix C or CA after part number to specify bi-directional devices.
3. For bi-directional devices having V_R of 10 volts and under, the I_R limit is double.

Taping Specification For Axial Lead Diodes

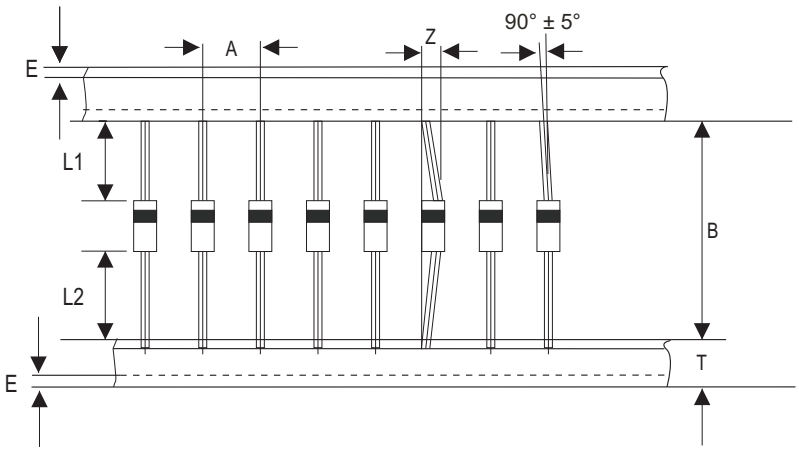

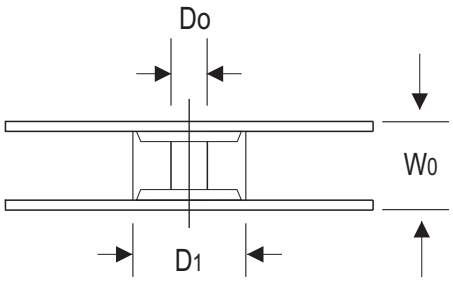

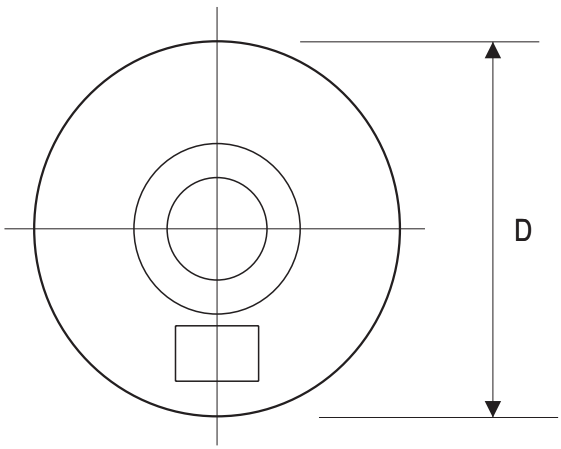

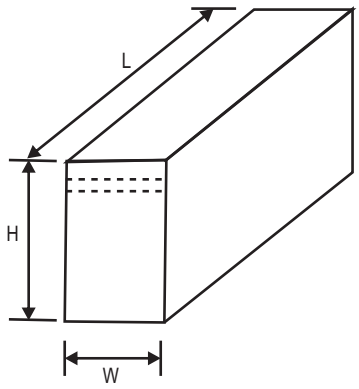

	SYMBOL	A	B	Z	T	E	L1	L2
DO-201	(mm)	10.00 ± 0.50	52.00 ± 0.50	1.20 (max)	6.00 ± 0.40	1.00 (max)	1.00 (max)	1.00 (max)
	(inch)	0.394 ± 0.020	2.047 ± 0.020	0.047 (max)	0.236 ± 0.016	0.039 (max)	0.039 (max)	0.039 (max)

	SYMBOL	D1	D0	D	W0	L	W	H
DO-201	(mm)	85.70 ± 0.30	16.60 ± 0.40	330.00	72.00 ± 3.00	260.00	75.00	145.00
	(inch)	3.374 ± 0.012	0.654 ± 0.016	13.000	2.835 ± 0.118	10.236	2.953	5.709

Marking Code

Packaging	Code	Part Number	
AMMO PACK	NA	1.5KEXXX(C)-G	1.5KEXXX(C)A-G
REEL PACK	T	1.5KEXXX(C)T-G	1.5KEXXX(C)AT-G
BULK PACK	B	1.5KEXXX(C)B-G	1.5KEXXX(C)AB-G

Note: (1)Suffix code after part number to specify packaging item.
(2)XXX on behalf of serial products.

Standard Packaging

Case Type	REEL PACK	
	REEL (pcs)	Reel Size (inch)
DO-201AD	1,200	13

Case Type	AMMO PACK	
	BOX (pcs)	CARTON (pcs)
DO-201AD	1,000	10,000

Case Type	BULK PACK	
	BOX (pcs)	CARTON (pcs)
DO-201AD	200	10,000