THIS DRAWING IS UNPUBLISHED. RELEASED FOR PUBLICATION 20
© COPYRIGHT 20 BY TYCO ELECTRONICS CORPORATION. ALL RIGHTS RESERVED.

SET UP GAUGE 2119599-2	LOC	DIST
	A	66

REVISIONS

P	LTR	DESCRIPTION	DATE	DWN	APVD
	1	ORIGINAL	11APRIL2012	GH	TE
	A	RELEASED	18JAN2013	GH	TE

DIMENSIONING AND TOLERANCING PER ASME Y14.5M-2009

ATLANTIC VERSION TERMINATOR INTERFACE ADAPTER	PART NUMBER	REVISION	DESCRIPTION	FEED TYPE
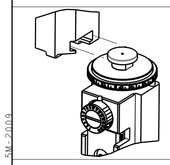	2150252-2	A	FINE CRIMP HEIGHT ADJUST	PNEUMATIC
	2150252-5	A	FINE CRIMP HEIGHT ADJUST	SERVO LATCH PLATE 4
	2150252-6	A	NON-CRIMP HEIGHT ADJUST	4 SERVO LATCH PLATE 10
	2150252-7	A	FINE CRIMP HEIGHT ADJUST	NONE
	7-2150252-7	A	CRIMP TOOLING KIT	-

APPLICATOR STYLE CONVERSION CHART

CONVERT TO	PART NUMBERS REQUIRED					
SERVO LATCH PLATE	2119951-1	1901697-2	8-2150252-5	-	-	2168400-7 (QUANTITY 2)
SMART APPLICATOR	2161326-1	-	8-2150252-4	-	-	-
PNEUMATIC FEED	2119950-1	2119792-1	-	2119641-1	-	2063440-1
-	-	-	-	-	-	-
-	-	-	-	-	-	-
-	-	-	-	-	-	-
-	-	-	-	-	-	-

APPLICATOR DATA

CRIMP	SIZE	TYPE
WIRE	5.11 mm [.201]	D
INSUL	-	-

APPL INSTRUCTIONS 408-10390

TERMINAL DATA: TE TERMINAL — TE CRIMP SPECIFICATION

TERMINAL NAME: RECPT,ULTRA-FAST FLAG, .250 SERIES

WIRE STRIP LENGTH	INSULATION DIAMETER RANGE
7.51-8.33 mm [.296-.328 IN]	Ø0.00-4.19 mm [.000-.165 IN]

TERMINAL APPLICATION SPECIFICATION	114-2123	-	-
	-	-	-

TERMINALS APPLIED 9

TE TERMINAL	TE TERMINAL	TE TERMINAL	TE TERMINAL
2-520128-2	2-521164-2	9-521164-2	

WIRE SIZE	CRIMP HEIGHT mm [INCH]	CRIMP HEIGHT REFERENCE SETTING 8	Ø SOLDER 11
18 OR (2) 22	1.79+/-0.05 [.070+/-.002]	5.7	.19 in [4.83mm]
22 OR 20	1.65+/-0.05 [.065+/-.002]	7.0	.19 in [4.83mm]

1 RECOMMENDED SPARE PARTS

2 GREASE BEARING SURFACES LIGHTLY

3. LUBRICATE DAILY PER THE APPLICATOR INSTRUCTION SHEET SUPPLIED WITH THE APPLICATOR.

4 APPLICATOR SPECIFIC DATA TO BE ENTERED INTO BLANK MEMORY CHIP AT ASSEMBLY. SEE BELOW FOR PART NUMBER:
PNEUMATIC FEED WITH "SMART APPLICATOR" CONVERSION: 8-2150252-4
SERVO FEED WITH "FINE CRIMP HEIGHT ADJUST": 8-2150252-5
SERVO FEED WITH "NON-CRIMP HEIGHT ADJUST": 8-2150252-6

5. ADJUSTMENT OF THE STRIPPER MAY BE REQUIRED WHEN MOVING THE APPLICATOR BETWEEN BENCH AND LEADMAKER APPLICATIONS.

6 GREASE THREADS, GROOVE AND O-RING ON ITEMS 35 & 252.

7 MAGNET, ITEM 166 MUST BE ORIENTED CORRECTLY IN ORDER TO PROPERLY ACTUATE THE COUNTER.

8 CRIMP HEIGHT REFERENCE SETTING WAS THE SETTING USED WHEN THE APPLICATOR WAS QUALIFIED AT THE FACTORY. ADJUSTMENT MAY BE NECESSARY WHEN RUNNING APPLICATOR IN THE FIELD.

9 TERMINAL PITCH NOT COMPATIBLE WITH MECHANICAL FEED.

10 WHEN ASSEMBLING -6 NON-CRIMP HEIGHT ADJUST APPLICATOR USE SHIM PACK 2119957-2 TO ALIGN APPLICATOR'S MAXIMUM WIRE CRIMP HEIGHT AT NORMAL TERMINATOR SHUT HEIGHT

11 TO CHECK CRIMP HEIGHT. CRIMP SOLDER (Ø.19 IN [4.83mm] 60/40 SOLID CORE) AND MEASURE AT CENTER OF SLUG.

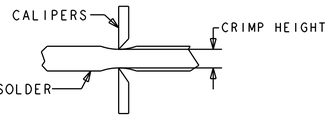

*WARNING
ON INSTALLATION, SET WIRE DISC, ITEM 40 TO LARGEST WIRE SIZE SETTING. USE OF SETTINGS BELOW MINIMUM REQUIRED CRIMP HEIGHT SETTING WILL CAUSE DAMAGE TO CRIMP TOOLING.

ATLANTIC VERSION
Shown on sheets 1 of 4 & 2 of 4
(Pacific version shown on sheets 3 of 4 & 4 of 4)

-	-	1	-	-	2119957-2	APPLICATOR SHIM PACK	260
-	1	-	1	1	8-21084-0	O-RING, .676 ID, .070 DIA. MAT.	252
-	-	-	-	1	2119640-1	PUSH ROD, AIR FEED	250
-	-	-	-	1	2079988-1	BUSHING, LCH5-12, MISUMI	249
-	-	-	-	1	2119641-1	FEED CAM, AIR FEED	248
-	1	-	1	1	2119798-1	DETENT PIN	247
-	1	-	1	1	1-22279-3	SPRING, COMPRESSION	246
-	-	1	-	-	2119759-1	RAM, AMP STYLE, END FEED, NON-ADJUST	245
-	-	2	2	-	2168400-7	SHCS, LOW HEAD, RoHS, M5 X 10	240
-	-	-	-	1	2063440-1	AIR FEED MODULE	238
-	1	1	1	1	2119644-6	RAM WASHER, PRECISION	221
-	-	1	1	-	2119740-2	TAG,IDENTIFICATION	213
1 -	1	1	1	1	467281-1	RETAINER, SHEAR, FLOATING	207
1 -	1	1	1	1	2161936-1	HOLDER, SHEAR, FLOATING	206
-	1	1	1	1	467500-1	SHEAR, FLOATING	205
-	-	REF	REF	-	1901697-2	FEED FINGER ASSEMBLY,EF	183
-	-	-	-	2	21045-3	RING, RETAIN, EXTERN, 3/16 CRESCENT	172
-	1	1	1	1	994969-1	MAGNET, RARE EARTH HIGH ENERGY	166
-	REF	REF	REF	REF	994970-2	COUNTER, MAGNETIC	164
-	-	-	-	1	240638-1	SPRING, FEED FINGER	163
-	1	1	1	1	2161937-1	STABILIZER	154
-	-	-	-	1	3-23627-7	PIN, RETAIN, GRVD, 3/16 X .854	137
-	-	REF	REF	-	SEE NOTE 4	MEMORY CHIP, PROGRAMMED	135
-	-	1	1	-	1633743-1	SERVO FEED LATCH ASM	133
-	1	1	1	1	2119956-2	DOCUMENTATION PACKAGE	71
-	1	1	1	1	3-18032-3	SCR, SET, FLT POINT M3 X 20.0	70
-	1	1	1	1	2-18032-2	SCR, SET, FLT POINT M3 X 10.0	69
-	1	-	-	1	2119740-1	TAG,IDENTIFICATION	67
-	2	2	2	2	2168078-1	SCREW, DRIVE, RH, RoHS	66
-	1	-	1	1	2119793-1	LIMITER, ADJUSTMENT BOLT	63
-	3	-	3	3	992763-5	SCR, SET, SOC, CONE POINT, M3 x 4.0	62
-	3	3	3	3	2079383-4	SCR, BHSC, RoHS (M4 X 8)	60
-	4	4	4	4	2168400-1	SHCS, LOW HEAD, RoHS, M4 X 12	57
-	2	2	2	2	2168083-2	SCR, SKT HD CAP, RoHS, M4 X 8.0	56
-	2	2	2	2	5018030-1	NUT, HEX, REG, RoHS, M3	54
-	2	2	2	2	986965-8	NUT, LOCK, HEX, TORQUE (M4)	53
-	-	-	-	1	2161952-1	PAWL,EF,AIR	51
-	-	-	-	1	18023-9	SCR, SKT HD CAP M4 X 6.0	49
-	1	1	1	1	1-2119655-5	APPLICATOR BASIC ASSEMBLY, EF	46
-	1	-	1	1	2119369-1	RAM,AMP STYLE, END FEED	44
-	1	1	1	1	2079383-7	SCR, BHSC, RoHS (M8 X 25)	41
-	1	-	1	1	2119645-1	DISC, NUMBERED FA WIRE ADJUSTMENT	40
-	1	-	1	1	2119957-1	APPLICATOR SHIM PACK	39
-	1	1	1	1	2119644-7	RAM WASHER, PRECISION	38
-	1	1	1	1	2119085-1	FA HEAD, ATLANTIC STYLE	37
-	2	2	2	2	5-22278-1	SPRING, COMPRESSION	36
-	1	-	1	1	2119092-1	BOLT, ADJUSTMENT	35
-	8	8	8	8	1-18028-2	WASHER, FLAT, REG M4	33
-	2	2	2	2	2079383-4	SCR, BHSC, RoHS (M4 X 8)	31
-	2	2	2	2	1-2168083-0	SCR, SKT HD CAP, RoHS, M4 X 10	29
-	1	1	1	1	240639-1	STRIPPER (MACHINING)	27
-	2	2	2	2	1-2168083-6	SCR, SKT HD CAP, RoHS, M4 X 35	25
-	1	1	1	1	2161941-1	PLATE, GUIDE, STRIP	24
-	2	2	2	2	2-22281-3	SPRING, COMPRESSION	22
-	1	1	1	1	2161948-1	DRAG	20
-	1	1	1	1	683736-1	GUIDE, STRIP, REAR	19
-	1	1	1	1	683737-1	FRONT STRIP GUIDE	18
-	4	4	4	4	1-2079383-1	SCR, BHSC, RoHS (M6 X 12)	17
-	1	1	1	1	4-22280-7	SPRING, COMPRESSION	13
1	1	1	1	1	2161935-1	ANVIL, RIGHT HAND	8
-	1	1	1	1	2161957-1	DEPRESSOR,SHEAR	5
-	1	1	1	1	238009-1	BLOCK, FL CRIMPER SPACER	4
-	1	1	1	1	2161331-1	SPACER, WIRE FUNNEL DEPRESSOR	2
1	1	1	1	1	467342-1	CRIMPER, RIGHT HAND	1
-77	-7	-6	-5	-2	PART NO	DESCRIPTION	ITEM NO

THIS DRAWING IS A CONTROLLED DOCUMENT FOR TYCO ELECTRONICS CORPORATION. IT IS SUBJECT TO CHANGE AND TO CONTROL ONE REVISING ORGANIZATION SHOULD BE CONTACTED FOR THE LATEST REVISION.

DWN	HOFFNER	11APRIL2012
CHK	T ELBIN	12APRIL2012
APVD	T ELBIN	12APRIL2012

TE Connectivity
Harrisburg, PA 17105-3608

DIMENSIONS: mm

TOLERANCES UNLESS OTHERWISE SPECIFIED:
0 PLC ±-
1 PLC ±0.5
2 PLC ±0.13
3 PLC ±0.013
4 PLC ±0.0001
ANGLES ±-

MATERIAL - -
FINISH - -

PRODUCT SPEC -
APPLICATION SPEC -
WEIGHT -

NAME: Ocean End Feed Applicator -

SIZE	CAGE CODE	DRAWING NO	RESTRICTED TO
A1	00779	C-2150252	-

Customer Accessible Production Drawing — SCALE 1:1 — SHEET 1 OF 4 — REV A

AMP 4805 REV 31MAR2000

SHEETS 3 & 4 ARE NOT REQUIRED FOR ATLANTIC VERSION

THIS DRAWING IS UNPUBLISHED. RELEASED FOR PUBLICATION 20
© COPYRIGHT 20 BY TYCO ELECTRONICS CORPORATION. ALL RIGHTS RESERVED.

LOC	DIST
A	66

REVISIONS

P	LTR	DESCRIPTION	DATE	DWN	APVD
	-	SEE SHEET 1	-	-	-

DIMENSIONING AND TOLERANCING PER ASME Y14.5M-2009

FEED TYPE

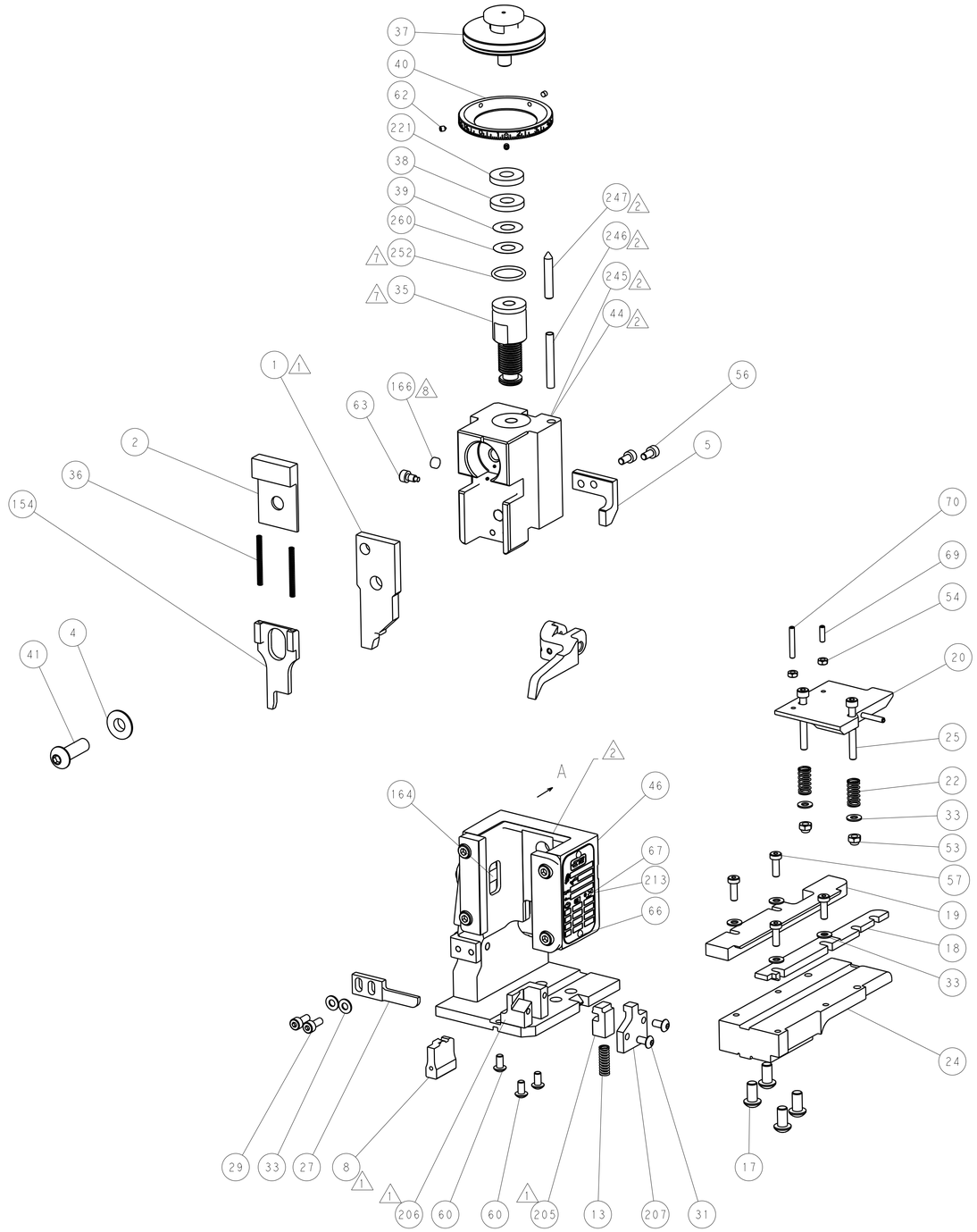

PNEUMATIC

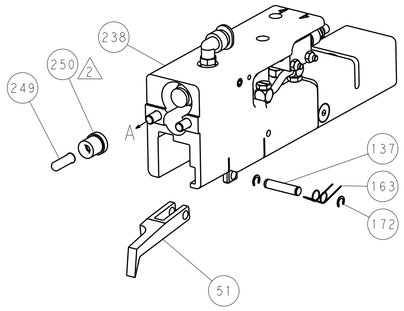

SERVO LATCH PLATE

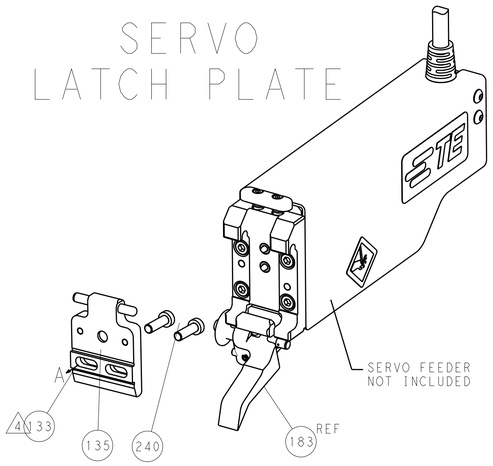

CAM POSITION

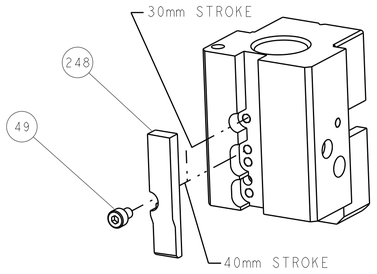

AIR FEED

ATLANTIC VERSION

Shown on sheets 1 of 4 & 2 of 4
(Pacific version shown on sheets 3 of 4 & 4 of 4)

THIS DRAWING IS A CONTROLLED DOCUMENT FOR TYCO ELECTRONICS CORPORATION IT IS SUBJECT TO CHANGE AND THE CONTROLLING ENGINEERING ORGANIZATION SHOULD BE CONTACTED FOR THE LATEST REVISION.

DIMENSIONS: mm

TOLERANCES UNLESS OTHERWISE SPECIFIED:

0 PLC	±
1 PLC	±0.5
2 PLC	±0.13
3 PLC	±0.013
4 PLC	±0.0001
ANGLES	±

MATERIAL - -

FINISH - -

DWN	HOFFNER	11APRIL2012
CHK	T. ELBIN	12APRIL2012
APVD	T. ELBIN	12APRIL2012

PRODUCT SPEC -

APPLICATION SPEC -

WEIGHT -

TE Connectivity
Harrisburg, PA 17105-3608

NAME Ocean End Feed Applicator -

SIZE	CAGE CODE	DRAWING NO	RESTRICTED TO
A1	00779	C-2150252	-

Customer Accessible Production Drawing

SCALE	SHEET	OF	REV
1:1	2	4	A

AMP 4805 REV 31MAR2000

SHEETS 3 & 4 ARE NOT REQUIRED FOR ATLANTIC VERSION

THIS DRAWING IS UNPUBLISHED. RELEASED FOR PUBLICATION 20
© COPYRIGHT 20 BY TYCO ELECTRONICS CORPORATION. ALL RIGHTS RESERVED.

SET UP GAUGE	LOC	DIST
2119599-2	A	66

REVISIONS

P	LTR	DESCRIPTION	DATE	DWN	APVD
	-	SEE SHEET 1	-	-	-

PACIFIC VERSION TERMINATOR INTERFACE ADAPTER	PART NUMBER	REVISION	DESCRIPTION	FEED TYPE
	2-2150252-2	A	FINE CRIMP HEIGHT ADJUST	PNEUMATIC
	2-2150252-5	A	FINE CRIMP HEIGHT ADJUST	SERVO LATCH PLATE △4
	2-2150252-7	A	FINE CRIMP HEIGHT ADJUST	NONE
	7-2150252-7	A	CRIMP TOOLING KIT	-

APPLICATOR STYLE CONVERSION CHART

CONVERT TO	PART NUMBERS REQUIRED					
SERVO LATCH PLATE	2119951-1	1901697-2	8-2150252-5	-	-	2168400-7 (QUANTITY 2)
SMART APPLICATOR	2161326-1	-	8-2150252-4	-	-	-
PNEUMATIC FEED	2119950-1	2119792-1	-	2119641-2	-	2063440-1
-	-	-	-	-	-	-
-	-	-	-	-	-	-

APPLICATOR DATA		
CRIMP	SIZE	TYPE
WIRE	5.11 mm [.201]	D
INSUL	-	-
APPL INSTRUCTIONS 408-10390		

TERMINAL DATA: TE TERMINAL		TE CRIMP SPECIFICATION
TERMINAL NAME: RECPT,ULTRA-FAST FLAG, .250 SERIES		
WIRE STRIP LENGTH 7.51-8.33 mm [.296-.328 IN]		INSULATION DIAMETER RANGE Ø0.00-4.19 mm [.000-.165 IN]
TERMINAL APPLICATION SPECIFICATION	114-2123	- -
	-	- -

TERMINALS APPLIED △9

TE TERMINAL	TE TERMINAL	TE TERMINAL	TE TERMINAL
2-520128-2	2-521164-2	9-521164-2	

WIRE SIZE	CRIMP HEIGHT mm [INCH]	CRIMP HEIGHT REFERENCE SETTING △8	Ø SOLDER △10
18 OR (2) 22	1.79+/-0.05 [.070+/-.002]	5.7	.19 in [4.83mm]
22 OR 20	1.65+/-0.05 [.065+/-.002]	7.0	.19 in [4.83mm]

*WARNING
ON INSTALLATION, SET WIRE DISC, ITEM 40 TO LARGEST WIRE SIZE SETTING. USE OF SETTINGS BELOW MINIMUM REQUIRED CRIMP HEIGHT SETTING WILL CAUSE DAMAGE TO CRIMP TOOLING.

△1 RECOMMENDED SPARE PARTS

△2 GREASE BEARING SURFACES LIGHTLY

3. LUBRICATE DAILY PER THE APPLICATOR INSTRUCTION SHEET SUPPLIED WITH THE APPLICATOR.

△4 APPLICATOR SPECIFIC DATA TO BE ENTERED INTO BLANK MEMORY CHIP AT ASSEMBLY. SEE BELOW FOR PART NUMBER:
PNEUMATIC FEED WITH "SMART APPLICATOR" CONVERSION: 8-2150252-4
SERVO FEED WITH "FINE CRIMP HEIGHT ADJUST": 8-2150252-5

5. ADJUSTMENT OF THE STRIPPER MAY BE REQUIRED WHEN MOVING THE APPLICATOR BETWEEN BENCH AND LEADMAKER APPLICATIONS.

△6 GREASE THREADS, GROOVE AND O-RING ON ITEMS 139 & 153.

△7 MAGNET, ITEM 166 MUST BE ORIENTED CORRECTLY IN ORDER TO PROPERLY ACTUATE THE COUNTER.

△8 CRIMP HEIGHT REFERENCE SETTING WAS THE SETTING USED WHEN THE APPLICATOR WAS QUALIFIED AT THE FACTORY. ADJUSTMENT MAY BE NECESSARY WHEN RUNNING APPLICATOR IN THE FIELD.

△9 TERMINAL PITCH NOT COMPATIBLE WITH MECHANICAL FEED.

△10 TO CHECK CRIMP HEIGHT. CRIMP SOLDER (Ø.19 IN [4.83mm] 60/40 SOLID CORE) AND MEASURE AT CENTER OF SLUG.

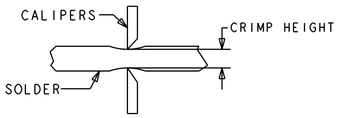

-77	-27	-25	-22	PART NO	DESCRIPTION	ITEM NO
-	1	1	1	2119782-1	FINE ADJUST HEAD ASM, PACIFIC STYLE	251
-	-	-	1	2119640-1	PUSH ROD, AIR FEED	250
-	-	-	1	2079988-1	BUSHING, LCH5-12, MISUMI	249
-	1	1	1	1-22279-3	SPRING, COMPRESSION	246
-	-	2	-	2168400-7	SHCS, LOW HEAD, RoHS, M5 X 10	240
-	-	-	1	2063440-1	AIR FEED MODULE	238
-	1	1	1	2119644-6	RAM WASHER, PRECISION	221
-	-	1	-	2119740-2	TAG,IDENTIFICATION	213
△1 -	1	1	1	467281-1	RETAINER, SHEAR, FLOATING	207
△1 -	1	1	1	2161936-1	HOLDER, SHEAR, FLOATING	206
-	1	1	1	467500-1	SHEAR, FLOATING	205
-	4	4	4	2079383-9	SCR, BHSC, RoHS (M6 X 20)	186
-	-	REF	-	1901697-2	FEED FINGER ASSEMBLY,EF	183
-	-	-	2	21045-3	RING, RETAIN, EXTERN, 3/16 CRESCENT	172
-	1	1	1	994969-1	MAGNET, RARE EARTH HIGH ENERGY	166
-	REF	REF	REF	994970-2	COUNTER, MAGNETIC	164
-	-	-	1	240638-1	SPRING, FEED FINGER	163
-	1	1	1	2161937-1	STABILIZER	154
-	1	1	1	8-21084-1	O-RING, .801 ID, .070 DIA. MAT.	153
-	-	-	1	2119641-2	FEED CAM, AIR FEED	152
-	1	1	1	2119798-2	DETENT PIN	145
-	1	1	1	2079383-8	SCR, BHSC, RoHS (M4 X 16)	144
-	1	1	1	1-2119655-6	APPLICATOR BASIC ASSEMBLY, EF	141
-	1	1	1	2119651-1	RAM, ASIAN STYLE, END FEED	140
-	1	1	1	2119092-2	BOLT, ADJUSTMENT	139
-	-	-	1	3-23627-7	PIN, RETAIN, GRVD, 3/16 X .854	137
-	-	REF	-	SEE NOTE 4	MEMORY CHIP, PROGRAMMED	135
-	-	1	-	1633743-1	SERVO FEED LATCH ASM	133
-	1	1	1	2119956-2	DOCUMENTATION PACKAGE	71
-	1	1	1	3-18032-3	SCR, SET, FLT POINT M3 X 20.0	70
-	1	1	1	2-18032-2	SCR, SET, FLT POINT M3 X 10.0	69
-	1	-	1	2119740-1	TAG,IDENTIFICATION	67
-	2	2	2	2168078-1	SCREW, DRIVE, RH, RoHS	66
-	2	2	2	2168400-5	SHCS, LOW HEAD, RoHS, M4 X 20	64
-	1	1	1	2119793-1	LIMITER, ADJUSTMENT BOLT	63
-	3	3	3	992763-5	SCR, SET, SOC, CONE POINT, M3 x 4.0	62
-	4	4	4	2168400-1	SHCS, LOW HEAD, RoHS, M4 X 12	57
-	2	2	2	2168083-2	SCR, SKT HD CAP, RoHS, M4 X 8.0	56
-	2	2	2	5018030-1	NUT, HEX, REG, RoHS, M3	54
-	2	2	2	986965-8	NUT, LOCK, HEX, TORQUE (M4)	53
-	-	-	1	2161952-1	PAWL,EF,AIR	51
-	-	-	1	18023-9	SCR, SKT HD CAP M4 X 6.0	49
-	1	1	1	2079383-7	SCR, BHSC, RoHS (M8 X 25)	41
-	1	1	1	2119645-1	DISC, NUMBERED FA WIRE ADJUSTMENT	40
-	1	1	1	2119957-1	APPLICATOR SHIM PACK	39
-	1	1	1	2119644-7	RAM WASHER, PRECISION	38
-	2	2	2	5-22278-1	SPRING, COMPRESSION	36
-	8	8	8	1-18028-2	WASHER, FLAT, REG M4	33
-	2	2	2	2079383-4	SCR, BHSC, RoHS (M4 X 8)	31
-	2	2	2	1-2168083-0	SCR, SKT HD CAP, RoHS, M4 X 10	29
-	1	1	1	240639-1	STRIPPER (MACHINING)	27
-	2	2	2	1-2168083-6	SCR, SKT HD CAP, RoHS, M4 X 35	25
-	1	1	1	2161941-1	PLATE, GUIDE, STRIP	24
-	2	2	2	2-22281-3	SPRING, COMPRESSION	22
-	1	1	1	2161948-1	DRAG	20
-	1	1	1	683736-1	GUIDE, STRIP, REAR	19
-	1	1	1	683737-1	FRONT STRIP GUIDE	18
-	1	1	1	4-22280-7	SPRING, COMPRESSION	13
△1 1	1	1	1	2161935-1	ANVIL, RIGHT HAND	8
-	1	1	1	2161957-1	DEPRESSOR,SHEAR	5
-	1	1	1	238009-1	BLOCK, FL CRIMPER SPACER	4
-	1	1	1	2161331-1	SPACER, WIRE FUNNEL DEPRESSOR	2
△1 1	1	1	1	467342-1	CRIMPER, RIGHT HAND	1

PACIFIC VERSION
Shown on sheets 3 of 4 & 4 of 4
(Atlantic version shown on sheets 1 of 4 & 2 of 4)

THIS DRAWING IS A CONTROLLED DOCUMENT FOR TYCO ELECTRONICS CORPORATION. IT IS SUBJECT TO CHANGE AND THE CONTROLLING ENGINEERING ORGANIZATION SHOULD BE CONTACTED FOR THE LATEST REVISION.

DWN	HOFFNER	11APRIL2012
CHK	T.ELBIN	12APRIL2012
APVD	T.ELBIN	12APRIL2012

DIMENSIONS: mm

TOLERANCES UNLESS OTHERWISE SPECIFIED:
0 PLC ±-
1 PLC ±0.5
2 PLC ±0.13
3 PLC ±0.013
4 PLC ±0.0001
ANGLES ±-

MATERIAL - -
FINISH - -

PRODUCT SPEC -
APPLICATION SPEC -
WEIGHT -

TE Connectivity
Harrisburg, PA 17105-3608

NAME: Ocean End Feed Applicator -

SIZE	CAGE CODE	DRAWING NO	RESTRICTED TO
A1	00779	C-2150252	-

Customer Accessible Production Drawing | SCALE 1:1 | SHEET 3 OF 4 | REV A

AMP 4805 REV 31MAR2000

SHEETS 1 & 2 ARE NOT REQUIRED FOR PACIFIC VERSION

DIMENSIONING AND TOLERANCING PER ASME Y14.5M-2009

THIS DRAWING IS UNPUBLISHED. RELEASED FOR PUBLICATION 20
© COPYRIGHT 20 BY TYCO ELECTRONICS CORPORATION. ALL RIGHTS RESERVED.

LOC	DIST
A	66

REVISIONS

P	LTR	DESCRIPTION	DATE	DWN	APVD
	-	SEE SHEET 1	-	-	-

DIMENSIONING AND TOLERANCING PER ASME Y14.5M-2009

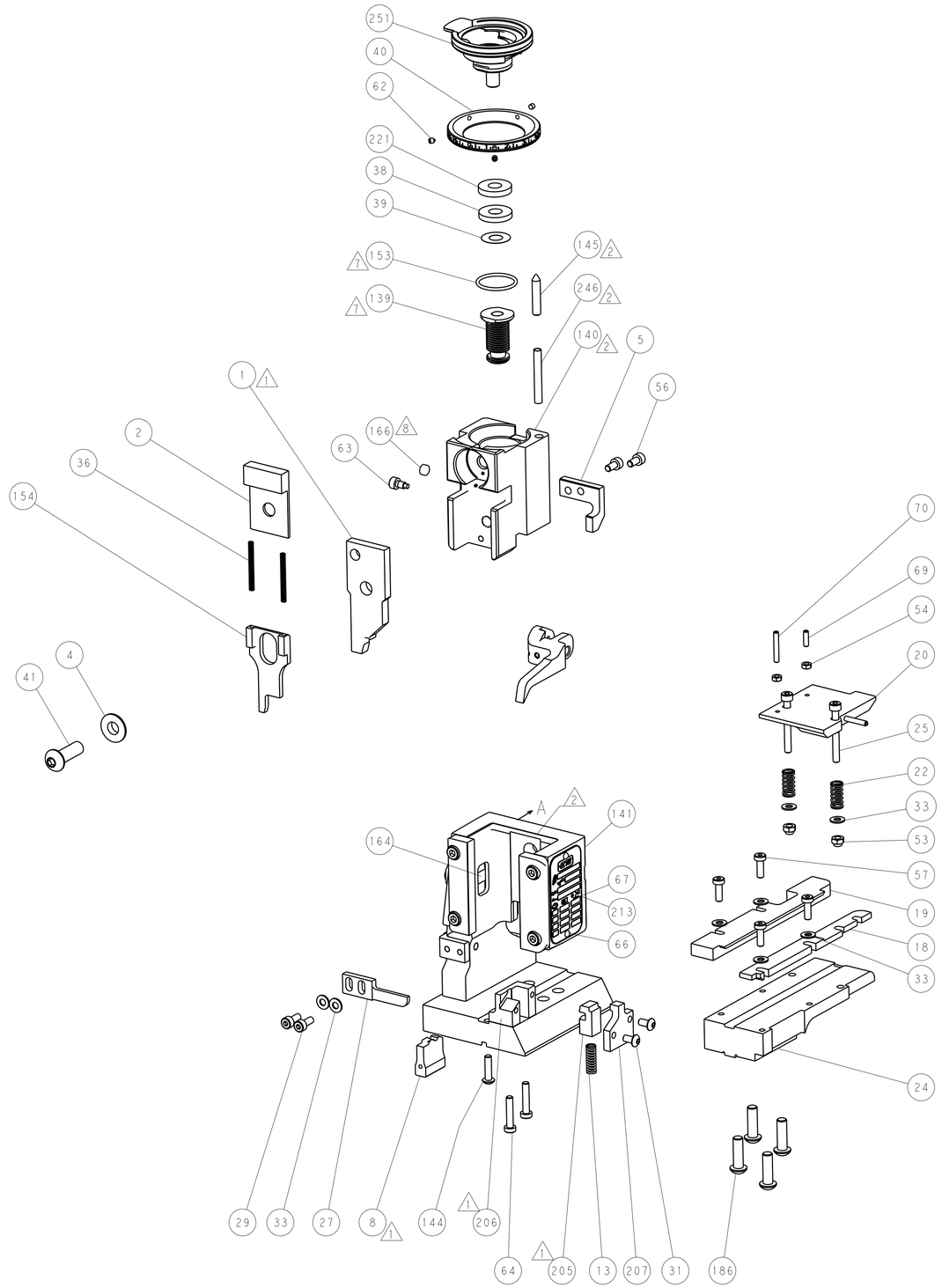

FEED TYPE

PNEUMATIC

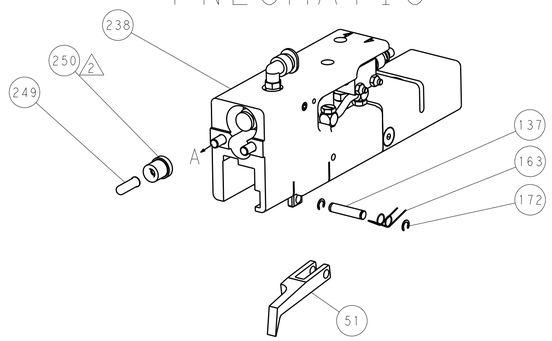

SERVO LATCH PLATE

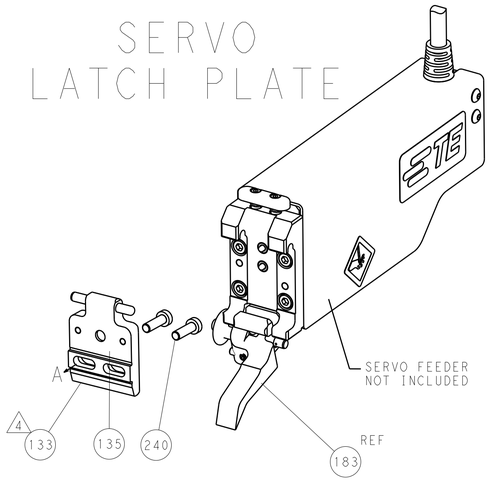

CAM POSITION

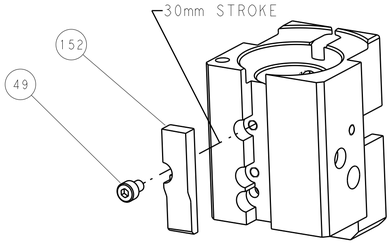

AIR FEED

PACIFIC VERSION

Shown on sheets 3 of 4 & 4 of 4

(Atlantic version shown on sheets 1 of 4 & 2 of 4)

THIS DRAWING IS A CONTROLLED DOCUMENT FOR TYCO ELECTRONICS CORPORATION. IT IS SUBJECT TO CHANGE. ANY PERSON OR ORGANIZATION OUTSIDE THE ORGANIZATION SHOULD BE CONTACTED FOR THE LATEST REVISION.

DIMENSIONS: mm

TOLERANCES UNLESS OTHERWISE SPECIFIED:

0 PLC	±-
1 PLC	±0.5
2 PLC	±0.13
3 PLC	±0.013
4 PLC	±0.0001
ANGLES	±-

MATERIAL - -

FINISH - -

DWN	HOFFNER	11APRIL2012
CHK	T. ELBIN	12APRIL2012
APVD	T. ELBIN	12APRIL2012

PRODUCT SPEC -

APPLICATION SPEC -

WEIGHT -

TE Connectivity
Harrisburg, PA 17105-3608

NAME: Ocean End Feed Applicator -

SIZE	CAGE CODE	DRAWING NO	RESTRICTED TO
A1	00779	C-2150252	-

Customer Accessible Production Drawing

SCALE 1:1 SHEET 4 OF 4 REV A

AMP 4805 REV 31MAR2000

SHEETS 1 & 2 ARE NOT REQUIRED FOR PACIFIC VERSION