THIS DRAWING IS UNPUBLISHED. RELEASED FOR PUBLICATION -,- .
© COPYRIGHT — By TE CONNECTIVITY ALL RIGHTS RESERVED.

LOC	DIST
HB	—

REVISIONS

P	LTR	DESCRIPTION	DATE	DWN	APVD
	F1	CHANGE THE WIDTH OF THE PIN TERMINAL FROM 0.6MM TO 0.8MM ECO-14-011875	19-AUG-14	Q.L	B.F

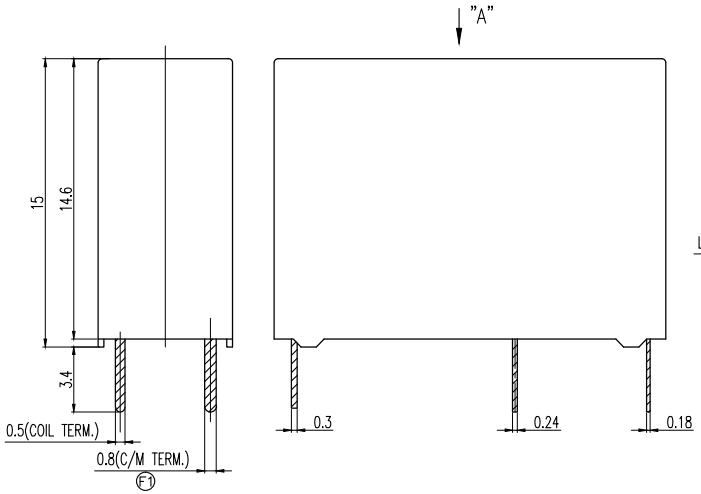

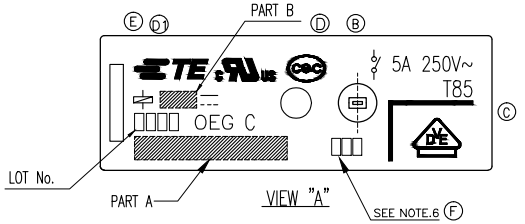

DRILLING DIAGRAM (BOTTOM VIEW)

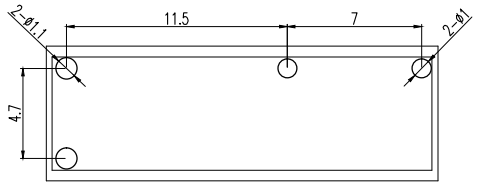

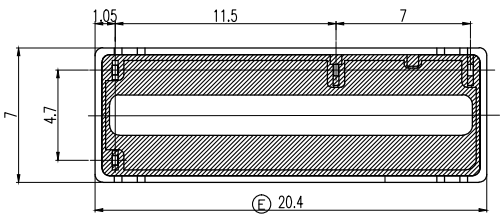

CIRCUIT DIAGRAM (BOTTOM VIEW)

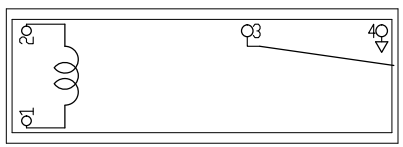

© NOTE:

1.LOT NO.SYSTEM AS FOLLOWING;

□□□□

WEEK

YEAR

E 2.ONE CHARACTER DISTINGUISH THE LINE IDENTITY, SUCH AS: A, B...

E 3.TERMINAL DIMENSION IS BEFORE SOLDER DIP.

E 4.FOR THE TIN-PLATING OF THE PINS:

+0.1mm FOR WIDTH,THICKNESS AND DIAMETER.

+0.5mm FOR LENGTH.

E 5.MARKING FROM INK CHANGE TO LASER

F 6.ADD LOT NO. SYSTEM AS FOLLOWING;

1 / I 1 / II A / III

I. DIGITS FOR DAY OF THE WEEK
1...MONDAY IN THIS WEEK;
2...TUESDAY IN THIS WEEK;
.....
7...SUNDAY IN THIS WEEK

II. DIGITS FOR SHIFT OF THE DAY
1...DAY SHIFT IN THIS DAY;
2...NIGHT SHIFT IN THIS DAY;

III. ONE CHARACTER DISTINGUISH THE LINE IDENTITY, SUCH AS: A,B.....Z

Diagram dimension	Tolerance
0.99mm max.	±0.1mm
1 - 2.99mm	±0.2mm
3mm min.	±0.3mm

THIS DRAWING IS A CONTROLLED DOCUMENT.

DIMENSIONS: mm

TOLERANCES UNLESS OTHERWISE SPECIFIED:
0 PLC ±—
1 PLC ±—
2 PLC ±—
3 PLC ±—
4 PLC ±—
ANGLES ±—

MATERIAL —

FINISH —

DWN	—
CHK	—
APVD	—
PRODUCT SPEC	—
APPLICATION SPEC	—
WEIGHT	—

TE Connectivity

NAME: PCJ-WG,000M SPEC

SIZE	CAGE CODE	DRAWING NO	RESTRICTED TO
A3	00779	C-1721547	—

CUSTOMER DRAWING | SCALE 5:1 | SHEET 1 OF 2 | REV F1

1470-19 (3/11)

THIS DRAWING IS UNPUBLISHED. RELEASED FOR PUBLICATION -,- .
© COPYRIGHT – By TE CONNECTIVITY ALL RIGHTS RESERVED.

LOC	DIST
HB	–

REVISIONS

P	LTR	DESCRIPTION	DATE	DWN	APVD
	–	SEE SHEET 1	–	–	–

No.	DESCRIPTION	TE PART NO	DESCRIPTION	PART B	PART A
N	PCJ-124D3MH-WG, 000M	1-1721547-4	SEAL UP INSPECTION ON EVERY PRODUCT	24V	PCJ-124D3MH-WG
M	PCJ-118D3MH-WG, 000M	1-1721547-3	SEAL UP INSPECTION ON EVERY PRODUCT	18V	PCJ-118D3MH-WG
L	PCJ-112D3MH-WG, 000M	1-1721547-2	SEAL UP INSPECTION ON EVERY PRODUCT	12V	PCJ-112D3MH-WG
K	PCJ-109D3MH-WG, 000M	1-1721547-1	SEAL UP INSPECTION ON EVERY PRODUCT	9V	PCJ-109D3MH-WG
J	PCJ-106D3MH-WG, 000M	1-1721547-0	SEAL UP INSPECTION ON EVERY PRODUCT	6V	PCJ-106D3MH-WG
I	PCJ-105D3MH-WG, 000M	1721547-9	SEAL UP INSPECTION ON EVERY PRODUCT	5V	PCJ-105D3MH-WG
H	PCJ-103D3MH-WG, 000M	1721547-8	SEAL UP INSPECTION ON EVERY PRODUCT	3V	PCJ-103D3MH-WG
G	PCJ-124D3M-WG, 000M	1721547-7		24V	PCJ-124D3M-WG
F	PCJ-118D3M-WG, 000M	1721547-6		18V	PCJ-118D3M-WG
E	PCJ-112D3M-WG, 000M	1721547-5		12V	PCJ-112D3M-WG
D	PCJ-109D3M-WG, 000M	1721547-4		9V	PCJ-109D3M-WG
C	PCJ-106D3M-WG, 000M	1721547-3		6V	PCJ-106D3M-WG
B	PCJ-105D3M-WG, 000M	1721547-2		5V	PCJ-105D3M-WG
A	PCJ-103D3M-WG, 000M	1721547-1		3V	PCJ-103D3M-WG

RELAY TYPE

ITEM	DESCRIPTION	MATERIAL	TREATMENT	INCOMBUSTIBILITY
18	SOLDER	Sn-Ag-Cu		
17	CASE	PA Ⓑ		94V-0
16	SEAL(CASE) JUST FOR WASH TIGHT	UV		
15	SEAL(CASE AND BASE)	EPOXY		
14	MAGNETIC WIRE	JUEW		
13	CARD	PBT		94V-0
12	STATIONARY CONTACT	Ag ALLOY		
11	STATIONARY TERMINAL	Cu ALLOY	SOLDER DIP	
10	MOVABLE CONTACT	Ag ALLOY		
9	MOVABLE SPRING	Cu ALLOY	SOLDER DIP	
8	BASE	PET Ⓑ		94V-0
7	HINGE SPRING	STAINLESS		
6	ARMATURE	STEEL	NIP	
5	CORE	STEEL	NIP	
4	YOKE	STEEL	NIP	
3	COIL TERMINAL B	Cu ALLOY	SOLDER DIP	
2	COIL TERMINAL A	Cu ALLOY	SOLDER DIP	
1	BOBBIN	PBT		94V-0

THIS DRAWING IS A CONTROLLED DOCUMENT.

DIMENSIONS: mm

TOLERANCES UNLESS OTHERWISE SPECIFIED:
0 PLC ± –
1 PLC ± –
2 PLC ± –
3 PLC ± –
4 PLC ± –
ANGLES ± –

MATERIAL –

FINISH –

DWN
CHK –
APVD –
PRODUCT SPEC –
APPLICATION SPEC –
WEIGHT –

TE Connectivity

NAME PCJ-WG,000M SPEC

SIZE	CAGE CODE	DRAWING NO	RESTRICTED TO
A3	00779	C-1721547	–

CUSTOMER DRAWING | SCALE 5:1 | SHEET 2 OF 2 | REV F1