POWR-GARD® Blocks and Holders Datasheet

POWR-BLOKS

Distribution Blocks • Splicer Blocks • Covers



Description

POWR-BLOKS power distribution blocks offer a safe, convenient way of splicing cables, providing a fixed junction tap-off point or splitting primary power into secondary circuits. Lx2xxx-DIN series offers integral DIN-Rail mount and an optional hinged safety cover.

Optional power distribution block covers provide protection against accidental shorting between poles caused by loose wires, tools, or other conductive material. They also protect personnel from accidentally contacting energized connectors.

Applications

Typical applications include heating, air conditioning and refrigeration systems, elevator systems, material handling equipment, control panels, motor controls, switchgear, and anywhere power needs to be distributed to more than one load.

Connectors

Box lug connectors are designed for use with a single or multiple, solid or class B or C stranded conductor. For UL approved use of more than one conductor per connector opening, contact Littelfuse Technical Service. Manufacturers of cable terminations can furnish crimp-on sleeves for fine stranded conductors which permit these conductors to be used with box lugs.

Ampere Ratings

The ampere rating per pole for power distribution blocks is based on the line ampacity of 75°C insulated conductors per NEC® Table 310.16. If 60°C insulated conductors are used, load must not exceed the ampacity of 60°C conductors. Use of conductors rated in excess of 75°C is permitted (for example 90°C), however, load must not exceed the ampacity of 75°C conductors.

Specifications

Voltage Rating	600 V
Current Rating	Based on NEC Table 310.16, using 75 °C copper wire
SCCR	Consult Factory
Material	Phenolic rated at 150 °C and Thermoplastic rated at 125 °C (LD1400 and LS1300 series only)
Connector	Aluminum: Highly conductive aluminum, tin plated Copper: Highly conductive copper, tin plated
Flammability Rating	UL94 V-0
Approvals	UL Recognized - 0LD/0LS Series (File: E171395) LFD/LFS Series (File: E309688) CSA Certified - 0LD/0LS Series (File: LR700111) LFD/LFS Series (File: 007316_0_000) UL Listed - 0LD57xxxx (File: E482231)
Environmental	RoHS compliant, Lead (Pb) free

Ordering Information

See Selection Guide on next page

Web Resources

For dimension, CAD and 3-D drawings, visit:
Littelfuse.com/powrbloks

Hinged Plastic Covers



Clear Plastic Covers



© 2020 Littelfuse, Inc.

Distribution Block Selection Guide

AMP PER POLE	POLES	CONNECTOR MATERIAL	LINE CONNECTION					LOAD CONNECTION					FIGURE	CATALOG/ ORDERING NUMBER	*PLASTIC COVER ORDERING NUMBER
			CONNECTOR IMAGE	OPENINGS PER POLE	LUG TYPE	WIRE RANGE	TORQUE RANGE	CONNECTOR IMAGE	OPENINGS PER POLE	LUG TYPE	WIRE RANGE	TORQUE RANGE			
115	1	AL		1	Slotted	#2 - #14	35-50 in-lbs		4	Slotted	#10 - #18	7 in-lbs	10	0LD14401Z	LPBC1441
115	2			1	Slotted	#2 - #14	35-50 in-lbs		4	Slotted	#10 - #18	7 in-lbs	10	0LD14402Z	LPBC1442
115	3			1	5/32" Hex	#2 - #14	50-40 in-lbs		4	5/64" Hex	#10 - #18	7 in-lbs	2	LFD14003Z	LPBC13
115	4			1	Slotted	#2 - #14	35-50 in-lbs		4	Slotted	#10 - #18	7 in-lbs	10	0LD14404Z	LPBC1444
175	1	AL		1	5/16" Hex	2/0 - #14	35-120 in-lbs		4	Slotted	#4 - #14	35 in-lbs	3	0LD25701Z**	LPBC21
175	2			1	3/16" Hex	2/0 - #14	40-120 in-lbs		4	1/8" Hex	#4 - #14	35 in-lbs	3	LFD25702Z	LPBC22
175	3			1	3/16" Hex	2/0 - #14	40-120 in-lbs		4	1/8" Hex	#4 - #14	35 in-lbs	3	LFD25703Z**	LPBC23
175	1	AL		1	3/16" Hex	2/0 - #14	35-120 in-lbs		4	1/8" Hex	#4 - #14	35 in-lbs	4	0LD25701ZXDIN	0LCH1321Z
175	2			1	3/16" Hex	2/0 - #14	35-120 in-lbs		4	1/8" Hex	#4 - #14	35 in-lbs	4	0LD25702ZXDIN	0LCH1322Z
175	3			1	3/16" Hex	2/0 - #14	35-120 in-lbs		4	1/8" Hex	#4 - #14	35 in-lbs	4	0LD25703ZXDIN	0LCH1323Z
175	Adder			1	–	2/0 - #14	35-120 in-lbs		4	–	#4 - #14	35 in-lbs	4	0LD2570AZXDIN	-
175	1	CU		1	3/16" Hex	2/0 - #14	35-120 in-lbs		4	Slotted	#4 - #14	35 in-lbs	3	0LD29701Z**	LPBC21
175	2			1	3/16" Hex	2/0 - #14	35-120 in-lbs		4	Slotted	#4 - #14	35 in-lbs	3	0LD29702Z**	LPBC22
175	3			1	3/16" Hex	2/0 - #14	35-120 in-lbs		4	Slotted	#4 - #14	35 in-lbs	3	0LD29703Z**	LPBC23
175	1	CU		1	3/16" Hex	2/0 - #14	35-120 in-lbs		4	Slotted	#4 - #14	35 in-lbs	4	0LD29701ZXDIN	0LCH1321Z
175	2			1	3/16" Hex	2/0 - #14	35-120 in-lbs		4	Slotted	#4 - #14	35 in-lbs	4	0LD29702ZXDIN	0LCH1322Z
175	3			1	3/16" Hex	2/0 - #14	35-120 in-lbs		4	Slotted	#4 - #14	35 in-lbs	4	0LD29703ZXDIN	0LCH1323Z
175	Adder			1	–	2/0 - #14	35-120 in-lbs		4	–	#4 - #14	35 in-lbs	4	0LD2970AZXDIN	-
175	2	AL		1	5/16" Hex	2/0 - #14	35-120 in-lbs		4	Slotted	#4 - #14	35 in-lbs	1	0LD04022Z**	LPBC02
175	3			1	5/16" Hex	2/0 - #14	35-120 in-lbs		4	Slotted	#4 - #14	35 in-lbs	1	0LD04023Z**	LPBC03
175	2	AL		1	5/16" Hex	2/0 - #14	35-120 in-lbs		6	Slotted	#4 - #14	35 in-lbs	1	0LD04012Z**	LPBC02
175	3			1	3/16" Hex	2/0 - #14	40-120 in-lbs		6	1/8" Hex	#4 - #14	35 in-lbs	1	LFD04013Z**	LPBC03
175	1	AL		1	5/16" Hex	2/0 - #14	35-120 in-lbs		6	1/8" Hex	#4 - #14	35 in-lbs	4	0LD25801ZXDIN	0LCH1321Z
175	2			1	5/16" Hex	2/0 - #14	35-120 in-lbs		6	1/8" Hex	#4 - #14	35 in-lbs	4	0LD25802ZXDIN	0LCH1322Z
175	3			1	5/16" Hex	2/0 - #14	35-120 in-lbs		6	1/8" Hex	#4 - #14	35 in-lbs	4	0LD25803ZXDIN	0LCH1323Z
175	Adder			1	5/16" Hex	2/0 - #14	35-120 in-lbs		6	1/8" Hex	#4 - #14	35 in-lbs	4	0LD2580AZXDIN	-
310	3	AL		1	5/16" Hex	350kcmil - #6	40-120 in-lbs		2	3/16" Hex	2/0 - #14	35-120 in-lbs	9	0LD335543Z	0LCH1333Z
310	2	AL		1	5/16" Hex	350kcmil - #6	275 in-lbs		6	Slotted	#4 - #14	35 in-lbs	1	0LD04042Z**	LPBC02
310	3			1	5/16" Hex	350kcmil - #6	275 in-lbs		6	Slotted	#4 - #14	35 in-lbs	1	0LD04043Z**	LPBC03
335	1	AL		1	5/16" Hex	400kcmil - #6	275 in-lbs		4	Slotted	#2 - #14	35-50 in-lbs	5	0LD35521Z**	LPBC31
335	2			1	5/16" Hex	400kcmil - #6	275 in-lbs		4	Slotted	#2 - #14	35-50 in-lbs	5	0LD35522Z**	LPBC32
380	3			1	3/8" Hex	500kcmil - #6	375 in-lbs		4	5/32" Hex	#2 - #14	35-50 in-lbs	5	LFD35523Z	LPBC33
335	1	AL		1	5/16" Hex	400kcmil - #6	275 in-lbs		6	Slotted	#2 - #14	35-50 in-lbs	5	0LD35531Z**	LPBC31
335	2			1	5/16" Hex	400kcmil - #6	275 in-lbs		6	Slotted	#2 - #14	35-50 in-lbs	5	0LD35532Z**	LPBC32
380	3			1	3/8" Hex	500kcmil - #6	375 in-lbs		6	5/32" Hex	#2 - #14	40-50 in-lbs	5	LFD35533Z	LPBC33
335	1	AL		1	Slotted	400kcmil - #6	275 in-lbs		8	Slotted	#2 - #14	35-50 in-lbs	6	0LD45601Z**	LPBC41
335	2			1	Slotted	400kcmil - #6	275 in-lbs		8	Slotted	#2 - #14	35-50 in-lbs	6	0LD45602Z**	LPBC42
335	3			1	Slotted	400kcmil - #6	275 in-lbs		8	Slotted	#2 - #14	35-50 in-lbs	6	0LD45603Z**	LPBC43
350	1	AL		2	3/16" Hex	2/0 - #14	35-120 in-lbs		6	Slotted	#4 - #14	35 in-lbs	5	0LD35551Z**	LPBC31
350	2			2	3w/16" Hex	2/0 - #14	35-120 in-lbs		6	Slotted	#4 - #14	35 in-lbs	5	0LD35552Z**	LPBC32
350	3			2	3/16" Hex	2/0- #14	40-120 in-lbs		6	1/8" Hex	#4 - #14	35 in-lbs	5	LFD35553Z	LPBC33
350	1	CU		2	Slotted	2/0 - #14	35-120 in-lbs		6	1/8" Hex	#4 - #14	35 in-lbs	5	0LD39551Z**	LPBC31
350	2			2	Slotted	2/0 - #14	35-120 in-lbs		6	1/8" Hex	#4 - #14	35 in-lbs	5	0LD39552Z**	LPBC32
350	3			2	Slotted	2/0 - #14	35-120 in-lbs		6	1/8" Hex	#4 - #14	35 in-lbs	5	0LD39553Z**	LPBC33
380	1	CU		1	Slotted	500kcmil - #6	375 in-lbs		6	5/32" Hex	#2 - #14	35-50 in-lbs	5	0LD39531Z**	LPBC31
380	2			1	Slotted	500kcmil - #6	375 in-lbs		6	5/32" Hex	#2 - #14	35-50 in-lbs	5	0LD39532Z**	LPBC32
380	3			1	Slotted	500kcmil - #6	375 in-lbs		6	5/32" Hex	#2 - #14	35-50 in-lbs	5	0LD39533Z**	LPBC33
380	1	AL		1	Slotted	500kcmil - #4	375 in-lbs		6	Slotted	#2 - #14	35-50 in-lbs	6	0LD45511Z**	LPBC41
380	2			1	Slotted	500kcmil - #4	375 in-lbs		6	Slotted	#2 - #14	35-50 in-lbs	6	0LD45512Z**	LPBC42
380	3			1	Slotted	500kcmil - #4	375 in-lbs		6	Slotted	#2 - #14	35-50 in-lbs	6	0LD45513Z**	LPBC43

*Note: AL = Aluminum / CU = Copper *Covers sold separately*
***Multiple wire rated on load side. Contact factory for additional information.*

© 2020 Littelfuse, Inc.

Distribution Block Selection Guide

AMP PER POLE	POLES	CONNECTOR MATERIAL	LINE CONNECTION					LOAD CONNECTION					FIGURE	CATALOG/ ORDERING NUMBER	*PLASTIC COVER ORDERING NUMBER
			CONNECTOR IMAGE	OPENINGS PER POLE	LUG TYPE	WIRE RANGE	TORQUE RANGE	CONNECTOR IMAGE	OPENINGS PER POLE	LUG TYPE	WIRE RANGE	TORQUE RANGE			
380	1	AL		1	3/8" Hex	500kcmil - #4	375 in-lbs		6	5/16" Hex	2/0 - #14	35-120 in-lbs	7	0LD55791Z	LPBC51
380	2			1	3/8" Hex	500kcmil - #4	375 in-lbs		6	5/16" Hex	2/0 - #14	35-120 in-lbs	7	0LD55792Z	LPBC52
380	3			1	3/8" Hex	500kcmil - #4	375 in-lbs		6	5/16" Hex	2/0 - #14	35-120 in-lbs	7	LFD55793Z	LPBC53
380	1	AL		1	3/8" Hex	500kcmil- #4	375 in-lbs		8	5/32" Hex	#2 - #14	35-50 in-lbs	7	0LD55941Z	LPBC51
380	2			1	3/8" Hex	500kcmil- #4	375 in-lbs		8	5/32" Hex	#2 - #14	35-50 in-lbs	7	0LD55942Z	LPBC52
380	3			1	3/8" Hex	500kcmil- #4	375 in-lbs		8	5/32" Hex	#2 - #14	35-50 in-lbs	7	0LD55943Z	LPBC53
380	1	AL		1	Slotted	500kcmil - #4	375 in-lbs		12	Slotted	#2 - #14	35-50 in-lbs	7	0LD55521Z**	LPBC51
380	2			1	Slotted	500kcmil - #4	375 in-lbs		12	Slotted	#2 - #14	35-50 in-lbs	7	0LD55522Z**	LPBC52
380	3			1	3/8" Hex	500kcmil - #4	375 in-lbs		12	5/32" Hex	#2 - #14	40-50 in-lbs	7	LFD55523Z	LPBC53
420	1	AL		1	1/2" Hex	600kcmil- #2	375 in-lbs		3	3/16" Hex	1/0 - #14	35-120 in-lbs	9	0LD35881Z	0LCH1331Z
									6	5/32" Hex	#2 - #14	35-50 in-lbs			
420	3	AL		1	1/2" Hex	600kcmil- #2	375 in-lbs		3	3/16" Hex	1/0 - #14	35-120 in-lbs	9	0LD35883Z	0LCH1333Z
									6	5/32" Hex	#2 - #14	35-50 in-lbs			
420	1	AL		1	1/2" Hex	600kcmil- #2	375 in-lbs		12	1/8" Hex	#4 - #14	35 in-lbs	9	0LD35951Z	0LCH1331Z
420	2			1	1/2" Hex	600kcmil- #2	375 in-lbs		12	1/8" Hex	#4 - #14	35 in-lbs	9	0LD35952Z	0LCH1332Z
510	1	AL		2	5/16" Hex	250kcmil - #6	275 in-lbs		12	1/8" Hex	#4 - #14	35 in-lbs	9	0LD35961Z**	0LCH1331Z
510	2			2	5/16" Hex	250kcmil - #6	275 in-lbs		12	1/8" Hex	#4 - #14	35 in-lbs	9	0LD35962Z**	0LCH1332Z
510	3			2	5/16" Hex	250kcmil - #6	275 in-lbs		12	1/8" Hex	#4 - #14	35 in-lbs	9	0LD35963Z**	0LCH1333Z
760	1	AL		2	3/8" Hex	500kcmil - #6	375 in-lbs		8	5/16" Hex	2/0 - #14	35-120 in-lbs	7	0LD55861Z	LPBC51
760	2			2	3/8" Hex	500kcmil - #6	375 in-lbs		8	5/16" Hex	2/0 - #14	35-120 in-lbs	7	0LD55862Z	LPBC52
760	3			2	3/8" Hex	500kcmil - #4	375 in-lbs		8	3/16" Hex	2/0 - #14	40-120 in-lbs	7	LFD55863Z	LPBC53
760	1	CU		2	3/8" Hex	500kcmil- #4	375 in-lbs		8	3/16" Hex	2/0 - #14	35-120 in-lbs	7	0LD59861Z	LPBC51
760	2			2	3/8" Hex	500kcmil- #4	375 in-lbs		8	3/16" Hex	2/0 - #14	35-120 in-lbs	7	0LD59862Z	LPBC52
760	3			2	3/8" Hex	500kcmil- #4	375 in-lbs		8	3/16" Hex	2/0 - #14	35-120 in-lbs	7	0LD59863Z	LPBC53
760	1	AL		2	3/8" Hex	500kcmil- #6	375 in-lbs		12	Slotted	#4 - #14	35 in-lbs	7	0LD55921Z**	LPBC51
760	2			2	3/8" Hex	500kcmil- #6	375 in-lbs		12	Slotted	#4 - #14	35 in-lbs	7	0LD55922Z**	LPBC52
760	3			2	3/8" Hex	500kcmil- #4	375 in-lbs		12	1/8" Hex	#4 - #14	35 in-lbs	7	LFD55923Z	LPBC53
760	1	CU		2	3/8" Hex	500kcmil- #6	375 in-lbs		12	Slotted	#2 - #14	35-50 in-lbs	7	0LD59921Z**	LPBC51
760	2			2	3/8" Hex	500kcmil- #6	375 in-lbs		12	Slotted	#2 - #14	35-50 in-lbs	7	0LD59922Z**	LPBC52
760	3			2	3/8" Hex	500kcmil- #6	375 in-lbs		12	Slotted	#2 - #14	35-50 in-lbs	7	0LD59923Z**	LPBC53
760	3	AL		2	1/2" Hex	500kcmil - #4	375 in-lbs		12	5/16" Hex	#2 - #14	35-50 in-lbs	7	0LD54083Z	LPBC53
840	3	AL		2	1/2" Hex	600kcmil- #2	375 in-lbs		4	5/16" Hex	3/0 - #6	120 in-lbs	7	0LD54113Z	LPBC53
									4	5/16" Hex	#4 - #14	35 in-lbs			
950	1	AL		2	9/16" Hex	750kcmil - 1/0	600 in-lbs		10	3/16" Hex	2/0 - #14	50-120 in-lbs	8	0LD57041Z	0LCH1351Z
950	3	AL		2	9/16" Hex	750kcmil - 1/0	600 in-lbs		10	3/16" Hex	2/0 - #14	50-120 in-lbs	8	0LD57043Z	0LCH1351Z
950	1	AL		2	9/16" Hex	750kcmil - 1/0	600 in-lbs		3	5/16" Hex	250kcmil - #6	275 in-lbs	8	0LD57051Z	0LCH1351Z
									12	5/32" Hex	#2 - #14	40-50 in-lbs			
950	3	AL		2	9/16" Hex	750kcmil - 1/0	600 in-lbs		3	5/16" Hex	250kcmil - #6	275 in-lbs	8	0LD57053Z	0LCH1351Z
									12	5/32" Hex	#2 - #14	40-50 in-lbs			
950	1	AL		2	9/16" Hex	750kcmil - 1/0	600 in-lbs		4	1/4" Hex	3/0 - #6	180 in-lbs	8	0LD57071Z	0LCH1351Z
									12	5/32" Hex	#2 - #14	40-50 in-lbs			
950	3	AL		2	9/16" Hex	750kcmil - 1/0	600 in-lbs		4	1/4" Hex	3/0 - #6	180 in-lbs	8	0LD57073Z	0LCH1351Z
									12	5/32" Hex	#2 - #14	40-50 in-lbs			

Note: AL = Aluminum / CU = Copper
**Covers sold separately*
***Multiple wire rated on load side. Contact factory for additional information.*

© 2020 Littelfuse, Inc.

Splicer Block Selection Guide

AMP PER POLE	POLES	CONNECTOR MATERIAL	LINE CONNECTION					LOAD CONNECTION					FIGURE	CATALOG/ ORDERING NUMBER	*PLASTIC COVER ORDERING NUMBER
			CONNECTOR IMAGE	OPENINGS PER POLE	LUG TYPE	WIRE RANGE	TORQUE RANGE	CONNECTOR IMAGE	OPENINGS PER POLE	LUG TYPE	WIRE RANGE	TORQUE RANGE			
115	1	AL		1	Slotted	#2 - #14	35-50 in-lbs		1	Slotted	#2 - #14	35-50 in-lbs	10	0LS13301Z	LPBC1441
115	2			1	Slotted	#2 - #14	35-50 in-lbs		1	Slotted	#2 - #14	35-50 in-lbs	10	0LS13302Z	LPBC1442
115	3			1	5/32" Hex	#2 - #14	40-50 in-lbs		1	5/32" Hex	#2 - #14	40-50 in-lbs	2	LFS13003Z	-
115	4			1	Slotted	#2 - #14	35-50 in-lbs		1	Slotted	#2 - #14	35-50 in-lbs	10	0LS13304Z	LPBC1444
115	1	AL		1	Slotted	#2 - #14	35-50 in-lbs		1	Slotted	#2 - #14	35-50 in-lbs	3	0LS25521Z	LPBC21
115	2			1	Slotted	#2 - #14	35-50 in-lbs		1	Slotted	#2 - #14	35-50 in-lbs	3	0LS25522Z	LPBC22
115	3			1	Slotted	#2 - #14	35-50 in-lbs		1	Slotted	#2 - #14	35-50 in-lbs	3	0LS25523Z	LPBC23
150	1	CU		1	3/16" Hex	1/0 - #14	35-120 in-lbs		1	3/16" Hex	1/0 - #14	35-120 in-lbs	3	0LS21211Z	LPBC21
150	2			1	3/16" Hex	1/0 - #14	35-120 in-lbs		1	3/16" Hex	1/0 - #14	35-120 in-lbs	3	0LS21212Z	LPBC22
150	3			1	3/16" Hex	1/0 - #14	35-120 in-lbs		1	3/16" Hex	1/0 - #14	35-120 in-lbs	3	0LS21213Z	LPBC23
175	1	AL		1	5/16" Hex	2/0 - #14	35-120 in-lbs		1	5/16" Hex	2/0 - #14	35-120 in-lbs	3	0LS25721Z	LPBC21
175	2			1	5/16" Hex	2/0 - #14	35-120 in-lbs		1	5/16" Hex	2/0 - #14	35-120 in-lbs	3	0LS25722Z	LPBC22
175	3			1	3/16" Hex	2/0 - #14	40-120 in-lbs		1	3/16" Hex	2/0 - #14	40-120 in-lbs	3	LFS25723Z	LPBC23
175	1	AL		1	5/16" Hex	2/0 - #14	35-120 in-lbs		1	5/16" Hex	2/0 - #14	35-120 in-lbs	4	0LS25721ZXDIN	0LCH1321Z
175	2			1	5/16" Hex	2/0 - #14	35-120 in-lbs		1	5/16" Hex	2/0 - #14	35-120 in-lbs	4	0LS25722ZXDIN	0LCH1322Z
175	3			1	5/16" Hex	2/0 - #14	35-120 in-lbs		1	5/16" Hex	2/0 - #14	35-120 in-lbs	4	0LS25723ZXDIN	0LCH1323Z
175	Adder			1	–	2/0 - #14	35-120 in-lbs		1	–	2/0 - #14	35-120 in-lbs	4	0LS2572AZXDIN	-
175	1	CU		1	5/16" Hex	2/0 - #14	35-120 in-lbs		1	5/16" Hex	2/0 - #14	35-120 in-lbs	4	0LS29721ZXDIN	0LCH1321Z
175	2			1	5/16" Hex	2/0 - #14	35-120 in-lbs		1	5/16" Hex	2/0 - #14	35-120 in-lbs	4	0LS29722ZXDIN	0LCH1322Z
175	3			1	5/16" Hex	2/0 - #14	35-120 in-lbs		1	5/16" Hex	2/0 - #14	35-120 in-lbs	4	0LS29723ZXDIN	0LCH1323Z
175	Adder			1	–	2/0 - #14	35-120 in-lbs		1	–	2/0 - #14	35-120 in-lbs	4	0LS2972AZXDIN	-
255	1	AL		1	5/16" Hex	250kcmil - #6	275 in-lbs		1	5/16" Hex	250kcmil - #6	275 in-lbs	5	0LS31231Z	LPBC31
255	2			1	5/16" Hex	250kcmil - #6	275 in-lbs		1	5/16" Hex	250kcmil - #6	275 in-lbs	5	0LS31232Z	LPBC32
255	3			1	5/16" Hex	250kcmil - #6	275 in-lbs		1	5/16" Hex	250kcmil - #6	275 in-lbs	5	0LS31233Z	LPBC33
255	1	CU		1	3/8" Hex	250kcmil - #6	375 in-lbs		1	3/8" Hex	250kcmil - #6	375 in-lbs	5	0LS31241Z	LPBC31
255	2			1	3/8" Hex	250kcmil - #6	375 in-lbs		1	3/8" Hex	250kcmil - #6	375 in-lbs	5	0LS31242Z	LPBC32
255	3			1	3/8" Hex	250kcmil - #6	375 in-lbs		1	3/8" Hex	250kcmil - #6	375 in-lbs	5	0LS31243Z	LPBC33
310	2	AL		1	5/16" Hex	350kcmil - #6	275 in-lbs		1	5/16" Hex	350kcmil - #6	275 in-lbs	1	0LS03032Z	LPBC02
310	3			1	5/16" Hex	350kcmil - #6	275 in-lbs		1	5/16" Hex	350kcmil - #6	275 in-lbs	1	0LS03033Z	LPBC03
310	1	AL		1	5/16" Hex	350kcmil - #6	275 in-lbs		1	5/16" Hex	350kcmil - #6	275 in-lbs	5	0LS31261Z	LPBC31
310	2			1	5/16" Hex	350kcmil - #6	275 in-lbs		1	5/16" Hex	350kcmil - #6	275 in-lbs	5	0LS31262Z	LPBC32
310	3			1	5/16" Hex	350kcmil - #6	275 in-lbs		1	5/16" Hex	350kcmil - #6	275 in-lbs	5	0LS31263Z	LPBC33
350	3	AL		2	5/16" Hex	2/0 - #14	35-120 in-lbs		2	5/16" Hex	2/0 - #14	35-120 in-lbs	9	0LS33053Z	0LCH1333Z
420	1	AL		1	1/2" Hex	600kcmil - #4	500 in-lbs		1	1/2" Hex	600kcmil - #4	500 in-lbs	6	0LS45571Z	LPBC41
420	2			1	1/2" Hex	600kcmil - #4	500 in-lbs		1	1/2" Hex	600kcmil - #4	500 in-lbs	6	0LS45572Z	LPBC42
420	3			1	1/2" Hex	600kcmil - #4	500 in-lbs		1	1/2" Hex	600kcmil - #4	500 in-lbs	6	0LS45573Z	LPBC43
510	3	AL		2	5/16" Hex	250kcmil - #6	275 in-lbs		2	5/16" Hex	250kcmil - #6	275 in-lbs	9	0LS33203Z	0LCH1333Z
620	1	AL		2	5/16" Hex	350kcmil - #4	275 in-lbs		2	5/16" Hex	350kcmil - #4	275 in-lbs	7	0LS51291Z	LPBC51
620	2			2	5/16" Hex	350kcmil - #4	275 in-lbs		2	5/16" Hex	350kcmil - #4	275 in-lbs	7	0LS51292Z	LPBC52
620	3			2	5/16" Hex	350kcmil - #4	275 in-lbs		2	5/16" Hex	350kcmil - #4	275 in-lbs	7	0LS51293Z	LPBC53
760	1	AL		2	3/8" Hex	500kcmil - #4	375 in-lbs		2	3/8" Hex	500kcmil - #4	375 in-lbs	7	0LS53011Z	LPBC51
760	2			2	3/8" Hex	500kcmil - #4	375 in-lbs		2	3/8" Hex	500kcmil - #4	375 in-lbs	7	0LS53012Z	LPBC52
760	3			2	3/8" Hex	500kcmil - #4	375 in-lbs		2	3/8" Hex	500kcmil - #4	375 in-lbs	7	0LS53013Z	LPBC53

Note: AL = Aluminum / CU = Copper
*Note: *Covers sold separately*

Littelfuse.com
© 2020 Littelfuse, Inc.
Rev: 2-B-051820

Distribution Block and Splicer Block Outline Drawings
Dimensions Inches (mm)

Figure 1

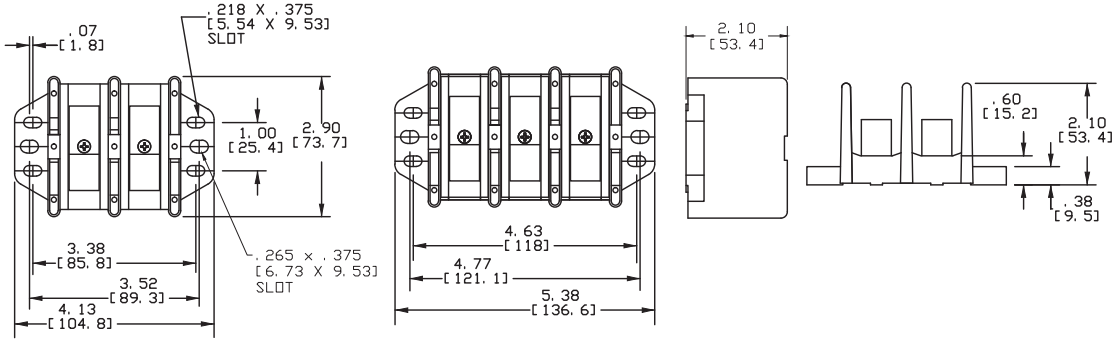

2-pole 3-pole

Figure 2

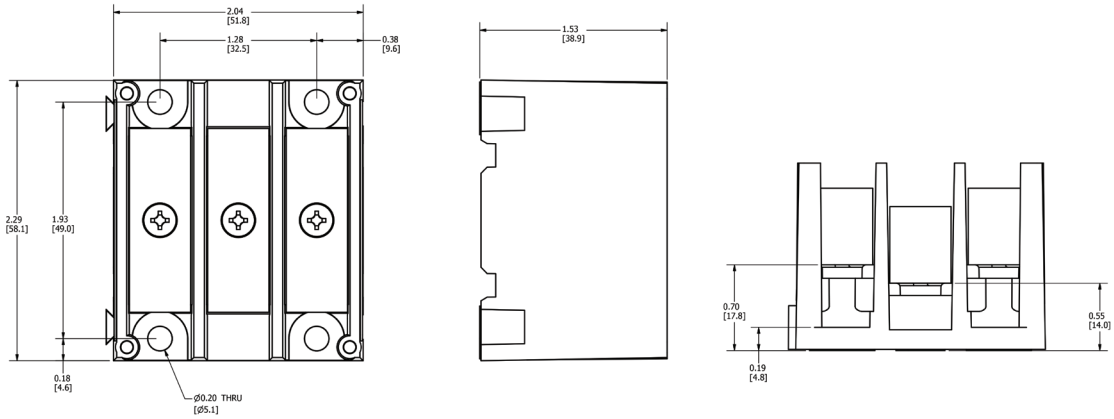

3-pole

Figure 3

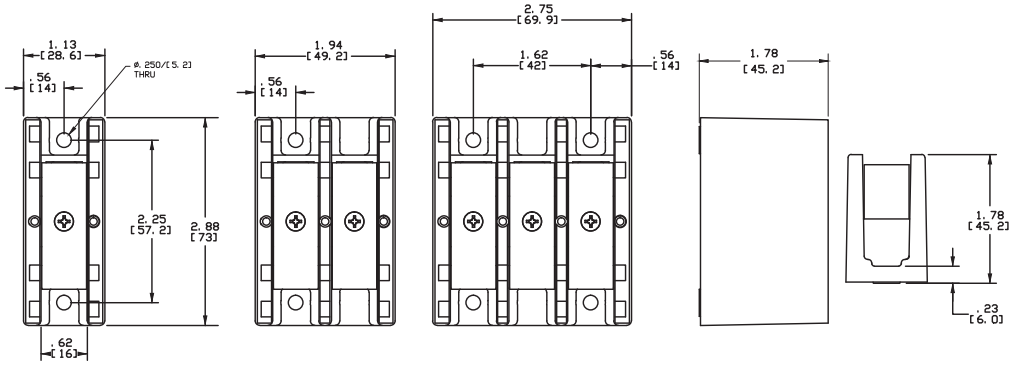

1-pole 2-pole 3-pole

© 2020 Littelfuse, Inc.

Distribution Block and Splicer Block Outline Drawings
Dimensions Inches (mm)

Figure 4

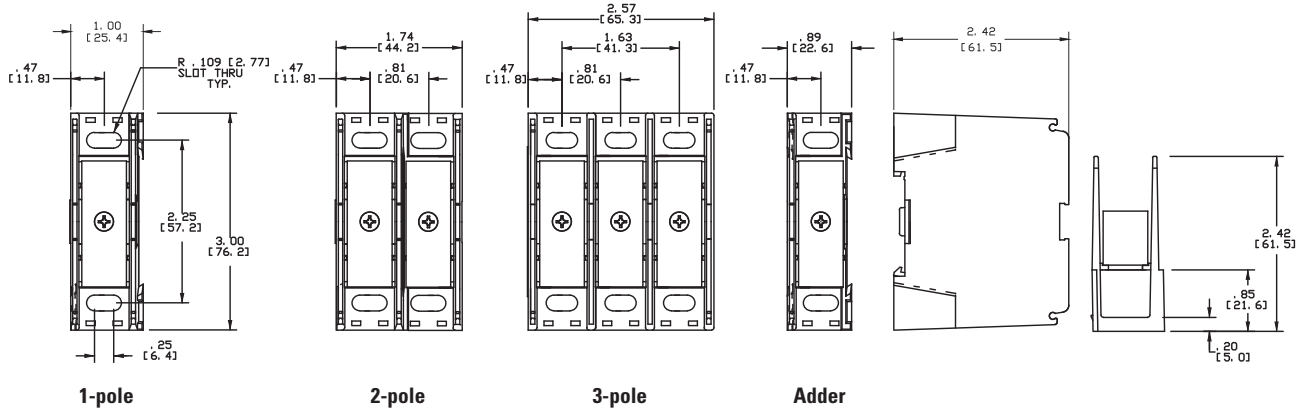

1-pole 2-pole 3-pole Adder

Figure 5

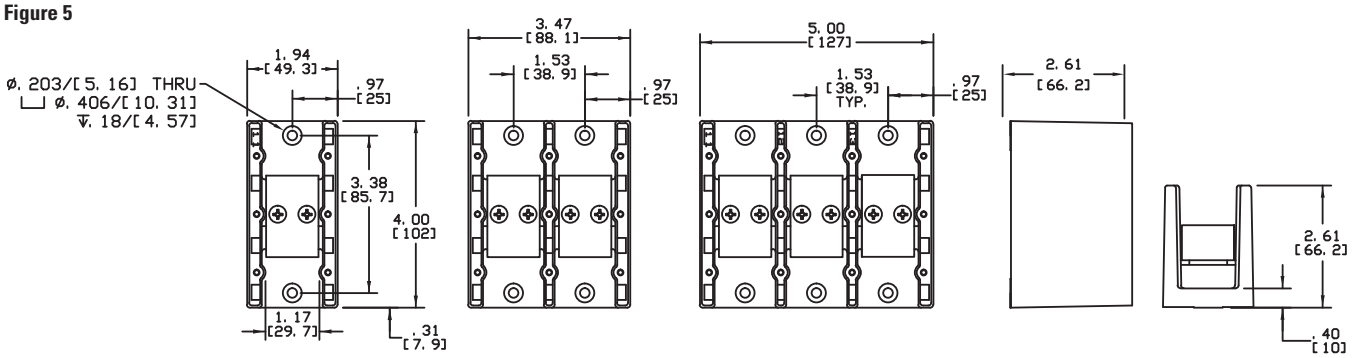

1-pole 2-pole 3-pole

Figure 6

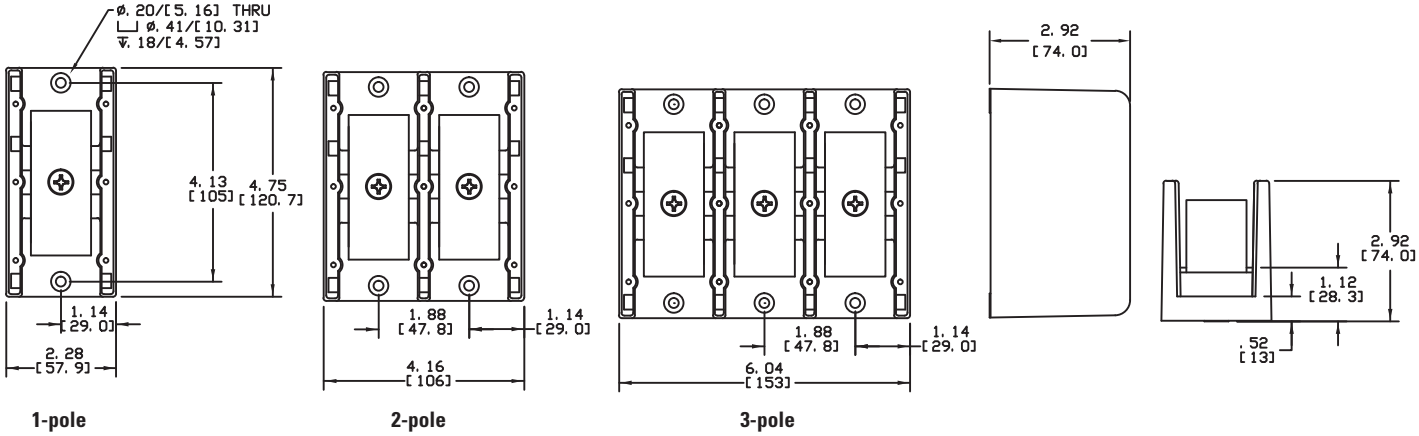

1-pole 2-pole 3-pole

© 2020 Littelfuse, Inc.

Distribution Block and Splicer Block Outline Drawings
Dimensions Inches (mm)

Figure 7

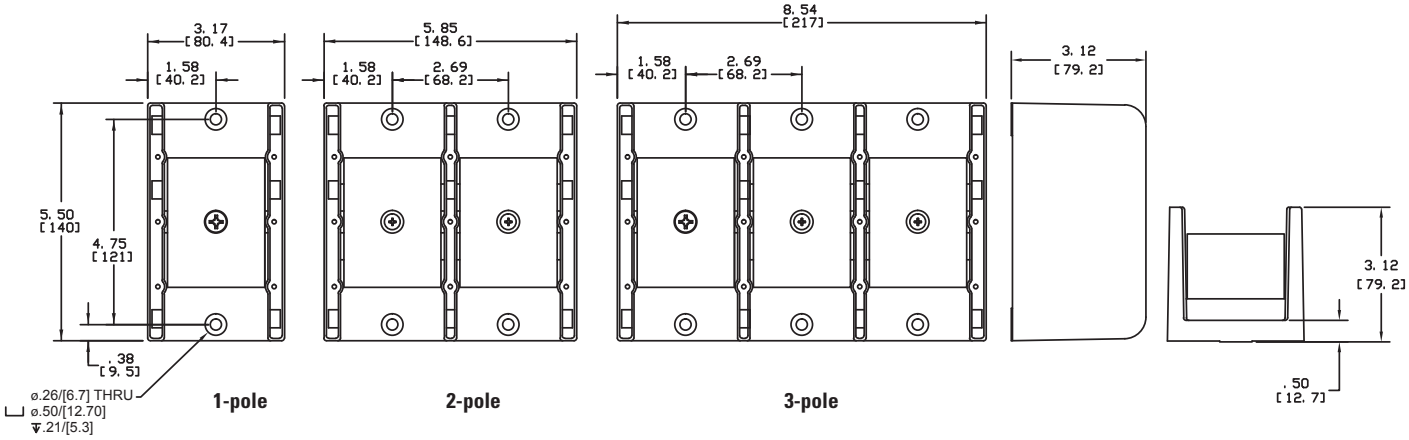

Figure 8

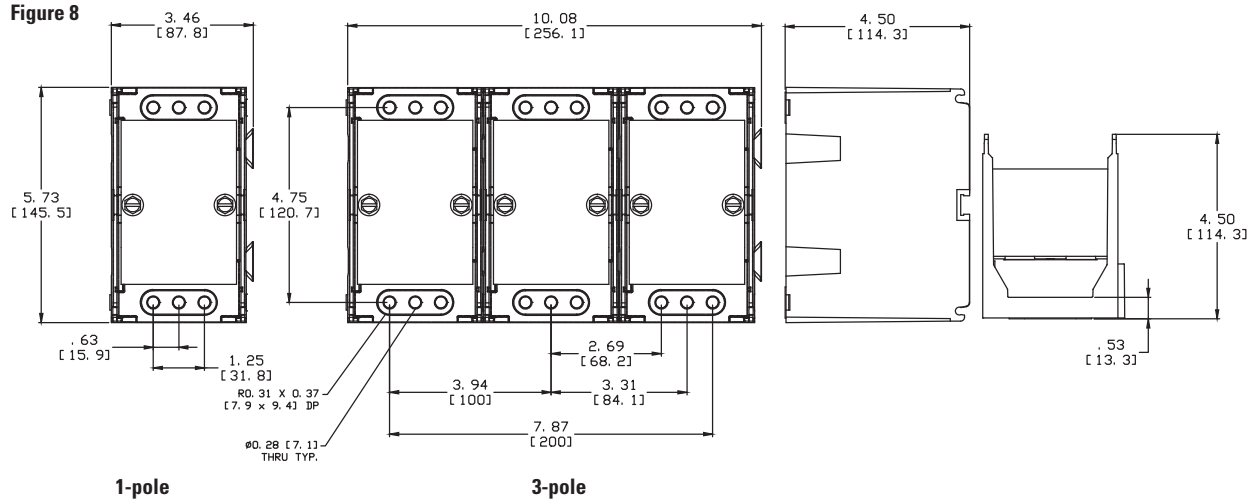

Figure 9

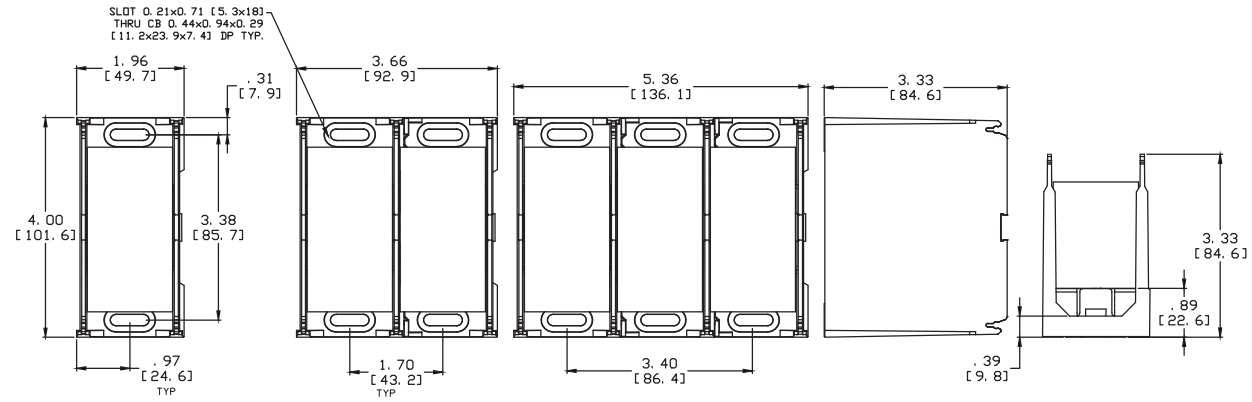

© 2020 Littelfuse, Inc.

Distribution Block and Splicer Block Outline Drawings
Dimensions Inches (mm)

Figure 10

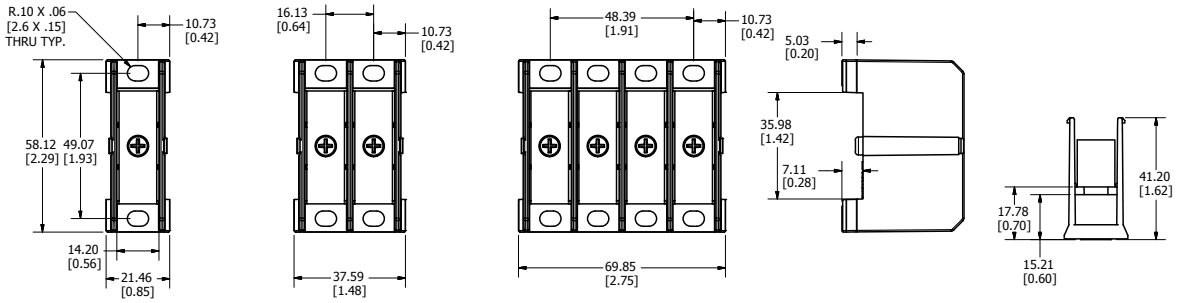

1-pole **2-pole** **4-pole**

Disclaimer Notice – Information furnished is believed to be accurate and reliable. However, users should independently evaluate the suitability of and test each product selected for their own applications. Littelfuse products are not designed for, and may not be used in, all applications. Read complete Disclaimer Notice at **www.littelfuse.com/product-disclaimer.**

© 2020 Littelfuse, Inc.