molex
one company > a world of innovation

This document was generated on 04/23/2010

PLEASE CHECK WWW.MOLEX.COM FOR LATEST PART INFORMATION

Part Number: 0908160524

Status: Active

Description: 1.27mm (.050") Pitch Picoflex® SMT Latched Vertical Header, 24 Circuits, Tin (Sn) Plating, Black

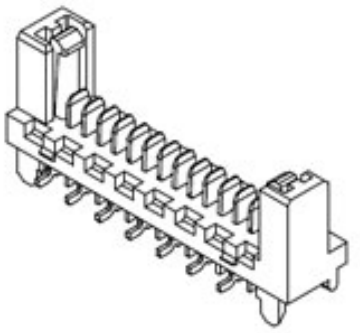

Series image - Reference only

Documents:

3D Model
Drawing (PDF)
Product Specification PS-99020-0011 (PDF)
RoHS Certificate of Compliance (PDF)

General

Product Family	PCB Headers
Series	90816
Application	Wire-to-Board
Product Name	Picoflex®

Physical

Breakaway	No
Circuits (Loaded)	24
Circuits (maximum)	24
Color - Resin	Black
Durability (mating cycles max)	5
First Mate / Last Break	No
Glow-Wire Compliant	No
Guide to Mating Part	Yes
Keying to Mating Part	N/A
Lock to Mating Part	Yes
Material - Metal	Brass
Material - Plating Mating	Tin
Material - Plating Termination	Nickel
Material - Resin	Nylon
Number of Rows	1
Orientation	Vertical
PC Tail Length (in)	0.041 In
PC Tail Length (mm)	1.05 mm
PCB Locator	No
PCB Retention	None
PCB Thickness Recommended (in)	0.063 In
PCB Thickness Recommended (mm)	1.60 mm
Packaging Type	Embossed Tape on Reel
Pitch - Mating Interface (in)	0.050 In
Pitch - Mating Interface (mm)	1.27 mm
Pitch - Term. Interface (in)	0.050 In
Pitch - Term. Interface (mm)	1.27 mm
Plating min: Mating (µin)	3
Polarized to Mating Part	Yes
Polarized to PCB	Yes
Shrouded	Partial
Stackable	No
Surface Mount Compatible (SMC)	Yes
Temperature Range - Operating	-40°C to +105°C
Termination Interface: Style	Surface Mount

Electrical

Current - Maximum per Contact	1.2A
Voltage - Maximum	250V

EU RoHS
ELV and RoHS Compliant
REACH SVHC
Not Reviewed
Halogen-Free Status
Not Reviewed

China RoHS

Need more information on product environmental compliance?

Email productcompliance@molex.com
For a multiple part number RoHS Certificate of Compliance, click here

Please visit the Contact Us section for any non-product compliance questions.

Search Parts in this Series
90816Series

Mates With
90327 Picoflex® PF-50

Material Info

Reference - Drawing Numbers

Product Specification	PS-99020-0011
Sales Drawing	SD-90816-001

This document was generated on 04/23/2010

PLEASE CHECK WWW.MOLEX.COM FOR LATEST PART INFORMATION

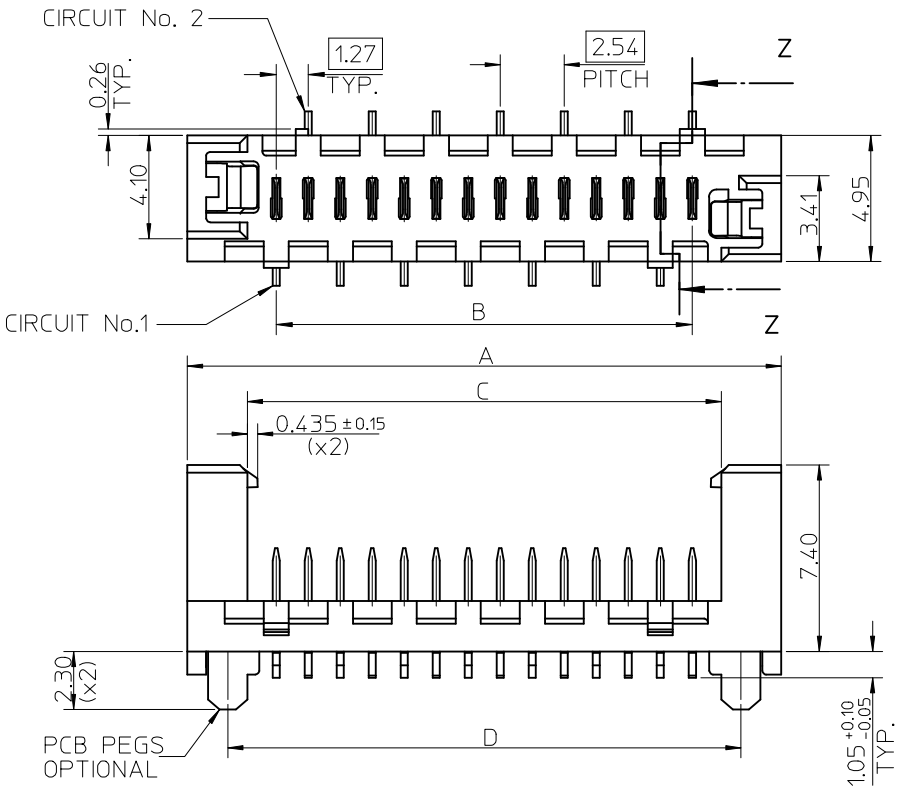

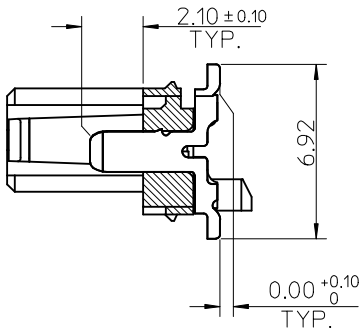

Z-Z

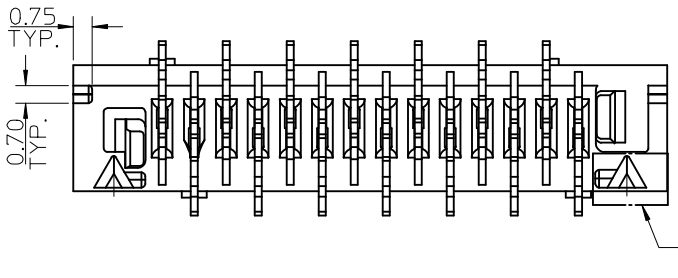

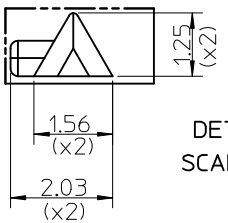

DETAIL1
SCALE 10:1

PART NO.	NUMBER OF CKTS	DIMN. A	DIMN. B	DIMN. C	DIMN. D	
90816-**04	4	10.86	3.81	6.11	7.66	NOTE 7
90816-**06	6	13.40	6.35	8.65	10.20	
90816-**08	8	15.94	8.89	11.19	12.74	
90816-**10	10	18.48	11.43	13.73	15.28	
90816-**12	12	21.02	13.97	16.27	17.82	
90816-**14	14	23.56	16.51	18.81	20.36	
90816-**16	16	26.10	19.05	21.35	22.90	
90816-**18	18	28.64	21.59	23.89	25.44	
90816-**20	20	31.18	24.13	26.43	27.98	
90816-**22	22	33.72	26.67	28.97	30.52	
90816-**24	24	36.26	29.21	31.51	33.06	
90816-**26	26	38.80	31.75	34.05	35.60	

14 CIRCUIT SHOWN FOR ILLUSTRATION ONLY.

90816 - * * **

CIRCUIT SIZE.

	PCB PEGS	TUBE PACKED	TAPE & REEL PACKED
0	YES	YES	NO
2	YES	NO	YES
3	NO	YES	NO
5	NO	NO	YES

0 = TIN VERSION
3 = GOLD VERSION

NOTES:

1- MATERIAL
HOUSING: PPA, GLASS-FILLED, COLOUR: BLACK
TERMINAL: BRASS

2- FINISHES: TERMINAL
GOLD: CONTACT AREA:SELECTIVE GOLD, 0.76 MICRONS MINIMUM,
SMT TAILS: GOLD FLASH, 0.10 MICRONS GOLD FLASH OVER
NICKEL UNDERPLATE.
TIN: 3 MICRONS MINIMUM OVER NICKEL UNDERPLATE.

3- PRODUCT SPECIFICATION: PS-99020-0011

4- PACKAGING SPECIFICATION: FOR TAPE AND REEL SEE: PK-90816-006
FOR TUBE SEE: PK-90816-007

5- MATES WITH MOLEX 90327 PART SERIES.

6- ALL SMT TAILS TO LIE WITHIN A COPLANARITY BAND OF 0 - 0.10 MICROMETER REF. FROM EACH OTHER.

7- 4 CIRCUIT PART NOT AVAILABLE IN TAPE AND REEL.

REV	DESCRIPTION	DRWN	CH'KD	APPR	EC NO
B	ADDED NOTE 7	DBYRNES 2008/11/10		JWALLACE 2008/11/11	E2009-0207

QUALITY SYMBOLS
▼=0
Ⓒ=0

GENERAL TOLERANCES (UNLESS SPECIFIED)

	mm	INCH
4 PLACES	± ---	± ---
3 PLACES	± ---	± ---
2 PLACES	± 0.25	± ---
1 PLACE	± 0.35	± ---
ANGULAR ± 2 °		

DRAFT WHERE APPLICABLE MUST REMAIN WITHIN DIMENSIONS

DIMENSION STYLE: MM ONLY
SCALE: 5:1
DESIGN UNITS: METRIC
THIRD ANGLE PROJECTION

		DATE
DRAWN BY	D.BYRNES	2008/08/16
CHECKED BY	JDWALLACE	2008/08/26
APPROVED BY	JDWALLACE	2008/08/27

TITLE: PICOFLEX SMT LATCHED HEADER

MOLEX INCORPORATED

MATERIAL NO.: SEE CHART
DOCUMENT NO.: SD-90816-001
SHEET NO.: 1 OF 2
SIZE: A3

THIS DRAWING CONTAINS INFORMATION THAT IS PROPRIETARY TO MOLEX INCORPORATED AND SHOULD NOT BE USED WITHOUT WRITTEN PERMISSION

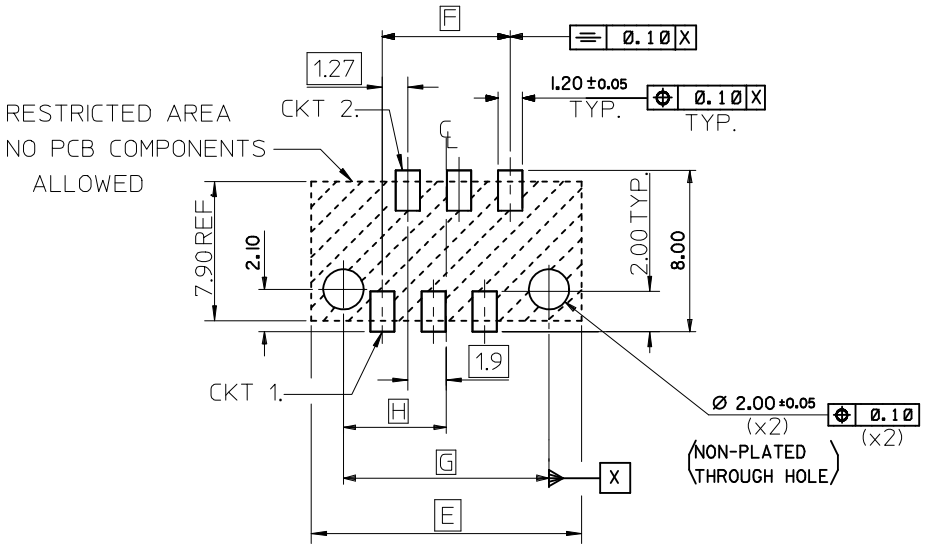

RECOMMENDED PCB THICKNESS 1.60±0.14

PCB LAYOUT FOR CLEARANCE FIT WITH PCB PEGS

HEADER VERSIONS 90816-*0**/*2**

VIEWED FROM COMPONENT SIDE

6CKT PART SHOWN FOR REFERENCE

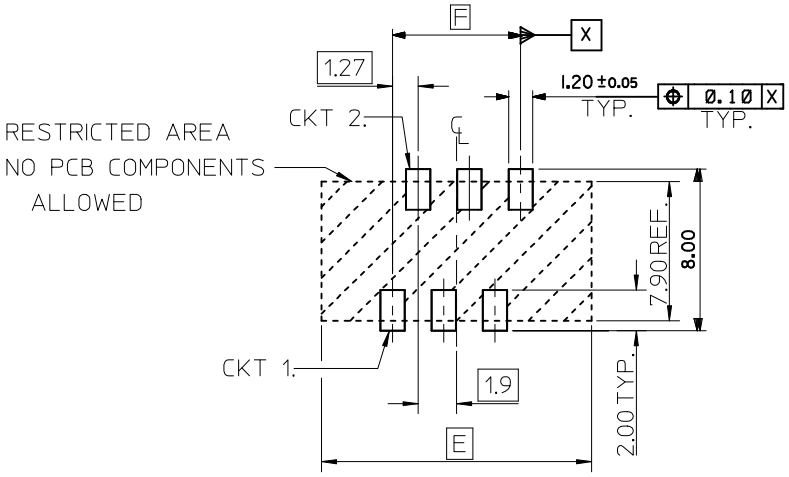

RECOMMENDED PCB THICKNESS 1.60±0.14

PCB LAYOUT WITHOUT PCB PEGS

HEADER VERSIONS 90816-*3**/*5**

VIEWED FROM COMPONENT SIDE

6CKT PART SHOWN FOR REFERENCE

90816-**26	26	38.80	31.75	35.60	17.80
90816-**24	24	36.26	29.21	33.06	16.53
90816-**22	22	33.72	26.67	30.52	15.26
90816-**20	20	31.18	24.13	27.98	13.99
90816-**18	18	28.64	21.59	25.44	12.72
90816-**16	16	26.10	19.05	22.90	11.45
90816-**14	14	23.56	16.51	20.36	10.18
90816-**12	12	21.02	13.97	17.82	8.91
90816-**10	10	18.48	11.43	15.28	7.64
90816-**08	8	15.94	8.89	12.74	6.37
90816-**06	6	13.40	6.35	10.20	5.10
90816-**04	4	10.86	3.81	7.66	3.83
PART NO.	NUMBER OF CKTS	DIM. E ±0.10	DIM. F ±0.10	DIM. G ±0.10	DIM. H ±0.10

SEE SHEET 1
EC NO: E2009-0207 2008/11/10
DRWN:DBYRNES 2008/11/10
CH'KD: 2008/11/11
APPR: JWALLACE
DESCRIPTION
REV B

QUALITY SYMBOLS
▼=0
Ⓒ=0

GENERAL TOLERANCES (UNLESS SPECIFIED)

	mm	INCH
4 PLACES	± ---	± ---
3 PLACES	± ---	± ---
2 PLACES	± 0.25	± ---
1 PLACE	± 0.35	± ---
ANGULAR ± 2 °		

DRAFT WHERE APPLICABLE MUST REMAIN WITHIN DIMENSIONS

DIMENSION STYLE: MM ONLY
SCALE: 5:1
DESIGN UNITS: METRIC
THIRD ANGLE PROJECTION

DRAWN BY: D.BYRNES DATE: 2008/08/16
CHECKED BY: JDWALLACE DATE: 2008/08/26
APPROVED BY: JDWALLACE DATE: 2008/08/27
MATERIAL NO.: SEE SHEET 1

TITLE: PICOFLEX SMT LATCHED HEADER

molex MOLEX INCORPORATED

DOCUMENT NO.: SD-90816-001
SHEET NO.: 2 OF 2
SIZE: A3

THIS DRAWING CONTAINS INFORMATION THAT IS PROPRIETARY TO MOLEX INCORPORATED AND SHOULD NOT BE USED WITHOUT WRITTEN PERMISSION