This document was generated on 06/08/2010

PLEASE CHECK WWW.MOLEX.COM FOR LATEST PART INFORMATION

Part Number: 0908140724
Status: Active
Overview: picoflex
Description: 1.27mm (.050") Pitch Picoflex® PF-50 SMT Header, Vertical, Low Profile, Surface Mount, Tin, 24 Circuits, Glow Wire Compatible

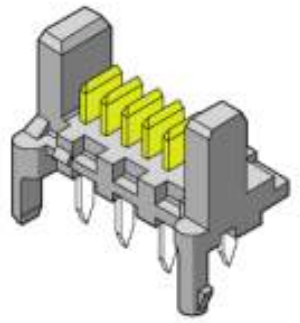

Series image - Reference only

Documents:

- 3D Model
- Drawing (PDF)
- Product Specification PS-99020-0011 (PDF)
- RoHS Certificate of Compliance (PDF)

Agency Certification

UL	E29179

General

Product Family	PCB Headers
Series	90814
Application	Wire-to-Board
Application Tooling Part Link	690081070
Comments	Low Profile SMT
Overview	picoflex
Product Name	Picoflex®

Physical

Breakaway	No
Circuits (Loaded)	24
Color - Resin	Black, Natural
Durability (mating cycles max)	30
First Mate / Last Break	No
Flammability	94V-0
Glow-Wire Compliant	Yes
Guide to Mating Part	No
Keying to Mating Part	None
Lock to Mating Part	Yes
Material - Metal	Brass
Material - Plating Mating	Tin
Material - Resin	High Temperature Thermoplastic
Number of Rows	1
Orientation	Vertical
PCB Locator	No
PCB Retention	Yes
PCB Thickness Recommended (in)	0.063 In
PCB Thickness Recommended (mm)	1.60 mm
Packaging Type	Tube
Pitch - Mating Interface (in)	0.050 In
Pitch - Mating Interface (mm)	1.27 mm
Pitch - Term. Interface (in)	0.050 In
Pitch - Term. Interface (mm)	1.27 mm
Plating min: Mating (µin)	120
Plating min: Mating (µm)	3
Plating min: Termination (µin)	120
Plating min: Termination (µm)	3
Polarized to Mating Part	Yes
Polarized to PCB	No
Shrouded	Open Ends
Stackable	No
Surface Mount Compatible (SMC)	Yes

EU RoHS
ELV and RoHS Compliant
REACH SVHC
Contains SVHC: No
Halogen-Free Status
Not Reviewed

China RoHS

Need more information on product environmental compliance?

Email productcompliance@molex.com
For a multiple part number RoHS Certificate of Compliance, click here

Please visit the Contact Us section for any non-product compliance questions.

Search Parts in this Series
90814Series

Mates With
90327 IDT Connector

Application Tooling | **FAQ**

Tooling specifications and manuals are found by selecting the products below. Crimp Height Specifications are then contained in the Application Tooling Specification document.

Global

Description	Product #
Extraction Tool (Plastic) for 90327 Connector, 4-26 Circuit	0690081070

Temperature Range - Operating	-40°C to +105°C
Termination Interface: Style	Surface Mount

Electrical

Current - Maximum per Contact	2.4A
Voltage - Maximum	250V AC/DC

Material Info

Reference - Drawing Numbers

Packaging Specification	SDA-90814-9001
Product Specification	PS-99020-0011
Sales Drawing	SDA-90814

This document was generated on 06/08/2010

PLEASE CHECK WWW.MOLEX.COM FOR LATEST PART INFORMATION

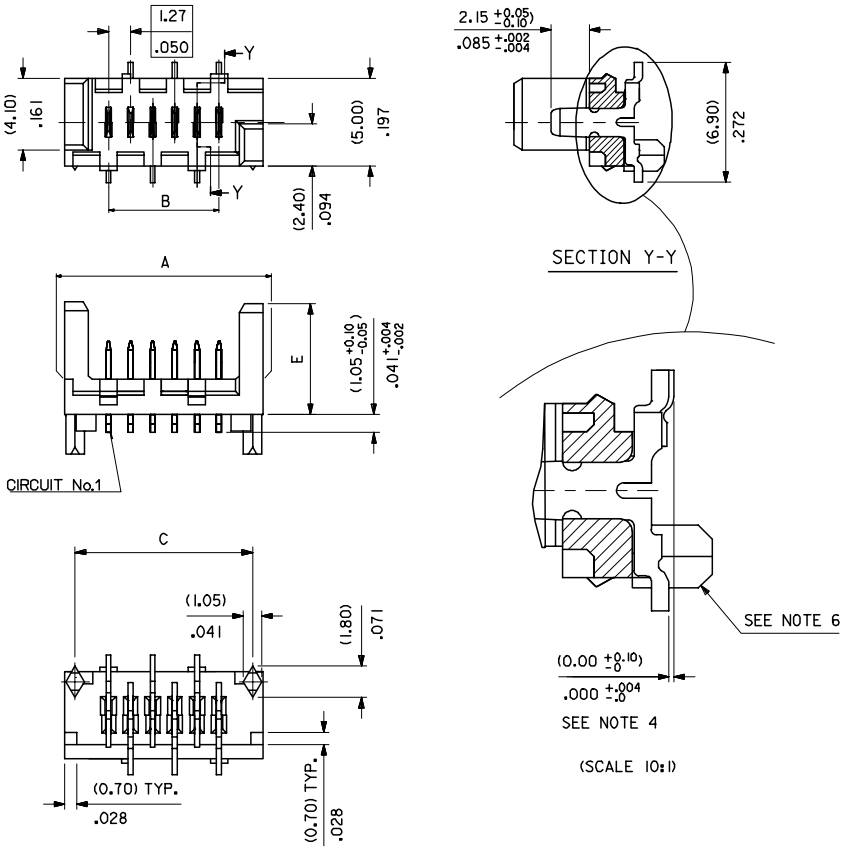

90814 - * * **

CIRCUIT SIZE

	PCB PEGS	TUBE PACKED	TAPE & REEL PACKED	POLARIZING PEG HEIGHT DIMN. E
0	YES	YES	NO	(6.40)/ .252
2	YES	NO	YES	(6.40)/ .252
3	NO	YES	NO	(6.40)/ .252
5	NO	NO	YES	(6.40)/ .252
6	NO	YES	NO	(4.10)/ .161
7	NO	NO	YES	(4.10)/ .161
8	YES	YES	NO	(4.10)/ .161
9	YES	NO	YES	(4.10)/ .161

0= (3-5UM)/120-200UIN TIN VERSION

3= (0.76UM)/30UIN GOLD VERSION

PART NO.	NUMBER OF CKTS	DIMN. A	DIMN. B	DIMN. C	QUANTITY OF PARTS PER TUBE (-*0**/-*3**/-*6** & -*8** VERSIONS)	TOOLED
90814-**34	34	(46.96)/1.849	(41.91)/1.650	(45.76)/1.802	10	NO
90814-**26	26	(36.80)/1.449	(31.75)/1.250	(35.60)/1.402	14	YES
90814-**24	24	(34.26)/1.349	(29.21)/1.150	(33.06)/1.302	15	YES
90814-**22	22	(31.72)/1.249	(26.67)/1.050	(30.52)/1.202	16	YES
90814-**20	20	(29.18)/1.149	(24.13)/ .950	(27.98)/1.102	18	YES
90814-**18	18	(26.64)/1.049	(21.59)/ .850	(25.44)/1.002	20	YES
90814-**16	16	(24.10)/ .949	(19.05)/ .750	(22.90)/ .902	22	YES
90814-**14	14	(21.56)/ .849	(16.51)/ .650	(20.36)/ .802	25	YES
90814-**12	12	(19.02)/ .749	(13.97)/ .550	(17.82)/ .702	28	YES
90814-**10	10	(16.48)/ .649	(11.43)/ .450	(15.28)/ .602	32	YES
90814-**08	8	(13.94)/ .549	(8.89)/ .350	(12.74)/ .502	38	YES
90814-**06	6	(11.40)/. 449	(6.35)/ .250	(10.20)/ .402	46	YES
90814-**04	4	(8.86)/ .349	(3.81)/ .150	(7.66)/ .302	60	YES

NOTES:

1) MATERIAL: HOUSING: NYLON 4/6 30% G.F.,UL 94 V-0, NATURAL (BEIGE)
TERMINAL- CARTRIDGE BRASS (0.28)/.011 REF THICK

2) PLATING:
TIN: TIN (3-5UM)/120uin-200uin OVER (1.27um)/51uin MIN NICKEL.

GOLD: (0.76UM)/30UIN SELECTIVE GOLD AND
(0.10-0.20UM)/4UIN-8UIN GOLD FLASH OVER (1.27UM)/50UIN
NICKEL UNDERCOAT

3) MATES WITH MOLEX 90327 PART SERIES

4) ALL SMT TAILS TO LIE WITHIN A COPLANARITY BAND OF
(0.0)/.0 - (0.10)/.004 REF. FROM EACH OTHER.

5) FOR TAPE & REEL PACKAGING DETAILS SEE SDA-90814-9001

6) PCB PEGS ARE OPTIONAL

7) PCB LAYOUT SHOWN ON SHEET 2

REDUCED CO-PL TOL
EC NO: E2007-0304
DRWN: JDENNEHY 2006/11/07
CH'KD: DMORIARTY 2006/11/07
APPR: JDENNEHY 2006/11/13
DESCRIPTION
REV

QUALITY SYMBOLS
▼=0
▽=0

GENERAL TOLERANCES (UNLESS SPECIFIED)

	mm	INCH
4 PLACES	± ---	± ---
3 PLACES	± ---	± .004
2 PLACES	± 0.10	± ---
1 PLACE	± ---	± ---

ANGULAR ±1/2°

DRAFT WHERE APPLICABLE MUST REMAIN WITHIN DIMENSIONS

DIMENSION STYLE: MM/IN
SCALE: 5:1
DESIGN UNITS: METRIC
THIRD ANGLE PROJECTION

DRAWN BY: DMCNAMAR DATE: 2001/08/16
CHECKED BY: PCURTIN DATE: 2001/08/16
APPROVED BY: MWILHITE DATE: 2001/08/16

TITLE: PICOFLEX SMT HEADER

MOLEX INCORPORATED

MATERIAL NO.: SEE CHART
DOCUMENT NO.: SDA-90814
SHEET NO.: 1 OF 2

SIZE: A2

THIS DRAWING CONTAINS INFORMATION THAT IS PROPRIETARY TO MOLEX INCORPORATED AND SHOULD NOT BE USED WITHOUT WRITTEN PERMISSION

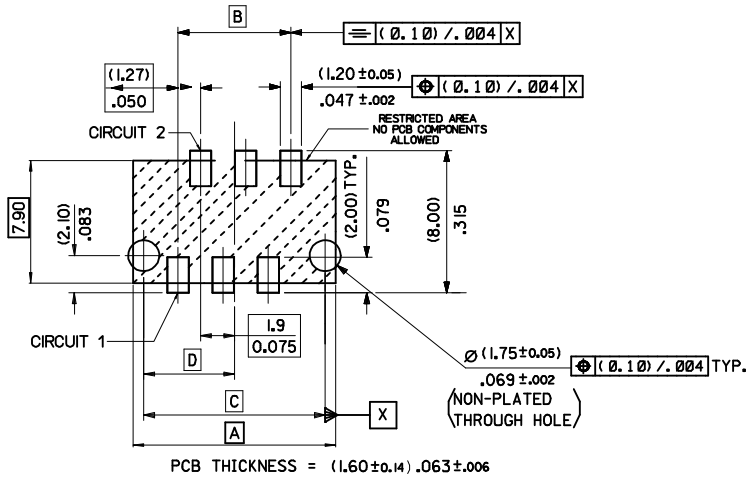

PCB LAYOUT FOR TRANSITION FIT WITH PCB PEGS
*HEADER VERSIONS 90814-*0**/-*2**/-*8**/-*9**,*
VIEWED FROM COMPONENT SIDE

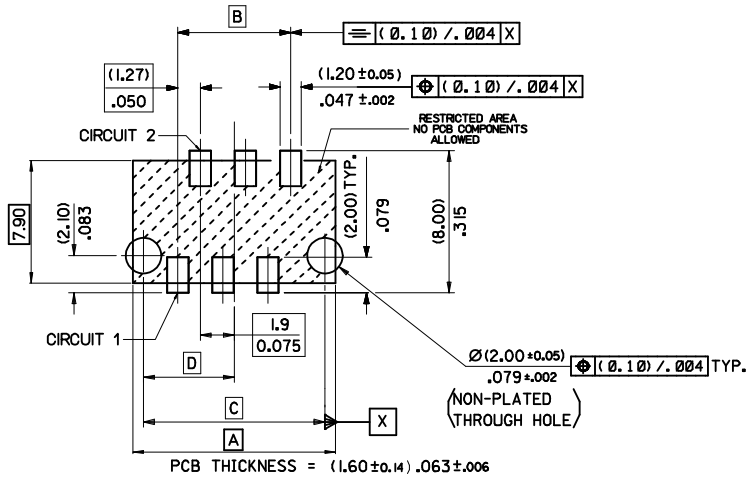

PCB LAYOUT FOR CLEARANCE FIT WITH PCB PEGS
*HEADER VERSIONS 90814-*0**/-*2**/-*8**/-*9**,*
VIEWED FROM COMPONENT SIDE

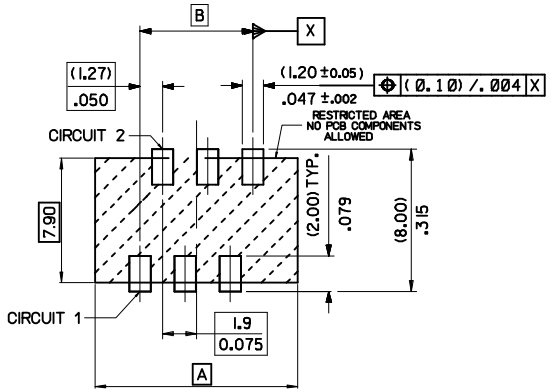

PCB THICKNESS = (1.60±0.14).063±.006

PCB LAYOUT FOR HEADERS WITHOUT PCB PEGS
*HEADER VERSIONS 90814-*3**/-*5**/-*6**/-*7**,*
VIEWED FROM COMPONENT SIDE

PART NO.	NUMBER OF CKTS	DIMN. A	DIMN. B	DIMN. C	DIMN. D
90814-**34	34	(46.96)/1.849	(41.91)/1.650	(45.76)/1.802	(22.88)/.901
90814-**26	26	(36.80)/1.449	(31.75)/1.250	(35.60)/1.402	(17.80)/.701
90814-**24	24	(34.26)/1.349	(29.21)/1.150	(33.06)/1.302	(16.53)/.651
90814-**22	22	(31.72)/1.249	(26.67)/1.050	(30.52)/1.202	(15.26)/.601
90814-**20	20	(29.18)/1.149	(24.13)/.950	(27.98)/1.102	(13.99)/.551
90814-**18	18	(26.64)/1.049	(21.59)/.850	(25.44)/1.002	(12.72)/.501
90814-**16	16	(24.10)/.949	(19.05)/.750	(22.90)/.902	(11.45)/.451
90814-**14	14	(21.56)/.849	(16.51)/.650	(20.36)/.802	(10.18)/.401
90814-**12	12	(19.02)/.749	(13.97)/.550	(17.82)/.702	(8.91)/.351
90814-**10	10	(16.48)/.649	(11.43)/.450	(15.28)/.602	(7.64)/.301
90814-**08	8	(13.94)/.549	(8.89)/.350	(12.74)/.502	(6.37)/.251
90814-**06	6	(11.40)/.449	(6.35)/.250	(10.20)/.402	(5.10)/.201
90814-**04	4	(8.86)/.349	(3.81)/.150	(7.66)/.302	(3.83)/.151

ADDED PART FOOTPRINT
EC NO: E2009-0235 2008/11/07
DRWN:OBYRNES 2008/11/10
CHKD:
APPR: JWALLACE 2008/11/10
DESCRIPTION
REV P

QUALITY SYMBOLS
▼=0
▽=0

GENERAL TOLERANCES (UNLESS SPECIFIED)

	mm	INCH
4 PLACES	± ---	± ---
3 PLACES	± ---	± ---
2 PLACES	± 0.10	± ---
1 PLACE	± 0.2	± ---
ANGULAR ±1/2°		

DRAFT WHERE APPLICABLE MUST REMAIN WITHIN DIMENSIONS

DIMENSION STYLE: MM ONLY
SCALE: 5:1
DESIGN UNITS: METRIC
THIRD ANGLE PROJECTION

DRAWN BY: DMCNAMAR DATE: 2001/08/23
CHECKED BY: BMAGUIRE DATE: 2001/08/23
APPROVED BY: MWILHITE DATE: 2001/08/23

TITLE: PICOFLEX SMT HEADER

molex MOLEX INCORPORATED

MATERIAL NO.: SEE CHART
DOCUMENT NO.: SDA-90814
SHEET NO.: 2 OF 2
SIZE: A2

THIS DRAWING CONTAINS INFORMATION THAT IS PROPRIETARY TO MOLEX INCORPORATED AND SHOULD NOT BE USED WITHOUT WRITTEN PERMISSION