This document was generated on 02/16/2010

PLEASE CHECK WWW.MOLEX.COM FOR LATEST PART INFORMATION

Part Number: 0906631601

Status: Active

Description: 2.54mm (.100") Pitch QF-50™ Vertical, MIL Keying with Latch/Eject Levers, Shrouded Header, 60 Circuits

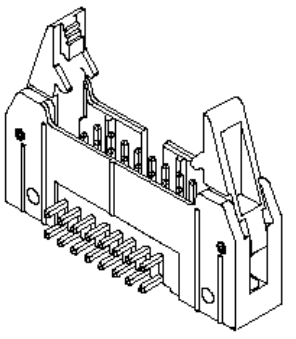

Series image - Reference only

Documents:

3D Model
Drawing (PDF)
Product Specification PS-99020-0015 (PDF)
RoHS Certificate of Compliance (PDF)

General

Product Family	Ribbon Cable / Wire Trap Connectors
Series	90663
Comments	Eject Levers
Component Type	PCB Header
Glow-Wire Compliant	No
Product Name	QF-50™

Physical

Circuits (Loaded)	60
Color - Resin	Black
Durability (mating cycles max)	300
Entry Angle	Vertical
Flammability	94V-0
Lock to Mating Part	None
Material - Metal	Brass
Material - Plating Mating	Gold
Material - Plating Termination	Tin
Material - Resin	Polyester
Number of Rows	2
PCB Retention	None
PCB Thickness Recommended (in)	0.062 In
PCB Thickness Recommended (mm)	1.60 mm
Packaging Type	Tray
Pitch - Mating Interface (in)	0.100 In
Pitch - Mating Interface (mm)	2.54 mm
Plating min: Mating (µin)	4
Plating min: Mating (µm)	0.1
Plating min: Termination (µin)	118
Plating min: Termination (µm)	3
Polarized to PCB	No
Shrouded	Fully
Stackable	No
Surface Mount Compatible (SMC)	No
Temperature Range - Operating	-25°C to +85°C
Termination Interface: Style	Through Hole
Wire Insulation Diameter	N/A
Wire Size AWG	N/A
Wire/Cable Type	Ribbon Cable

Electrical

CSA	LR19980
Current - Maximum per Contact	2.5A
UL	E29179
Voltage - Maximum	250V AC/DC

Solder Process Data

EU RoHS
ELV and RoHS Compliant
REACH SVHC
Not Reviewed
Halogen-Free Status
Not Reviewed

China RoHS

Need more information on product environmental compliance?

Email productcompliance@molex.com
For a multiple part number RoHS Certificate of Compliance, click here

Please visit the Contact Us section for any non-product compliance questions.

Search Parts in this Series
90663Series

Mates With
90635

Lead-free Process Capability	Wave Capable (TH only)

Material Info

Reference - Drawing Numbers

Product Specification	PS-99020-0015
Sales Drawing	SDA-90663E

This document was generated on 02/16/2010

PLEASE CHECK WWW.MOLEX.COM FOR LATEST PART INFORMATION

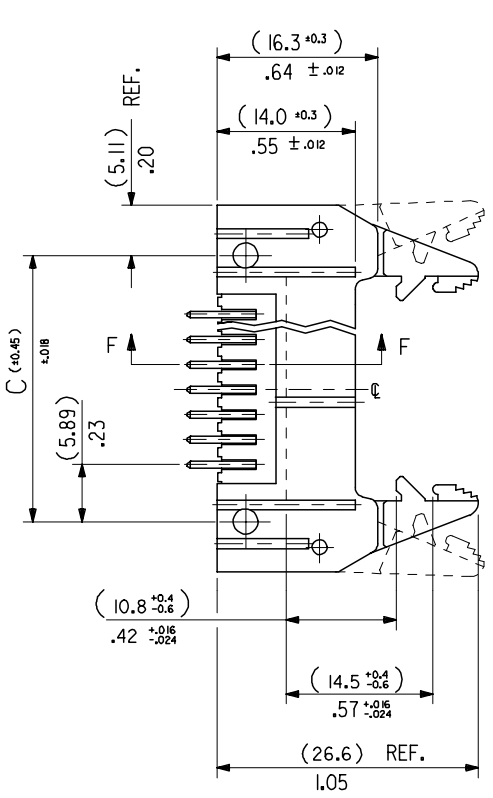

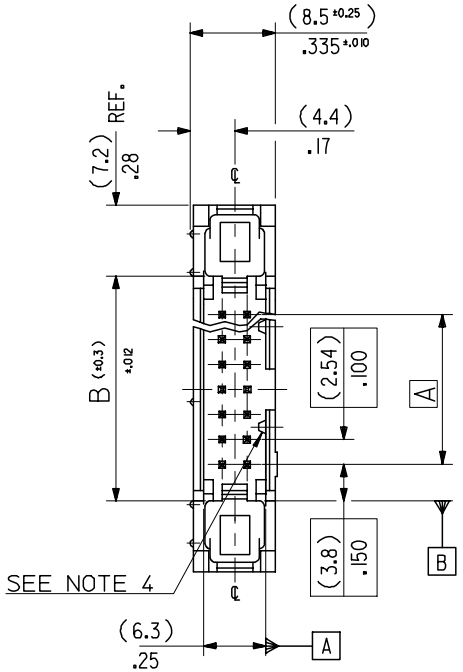

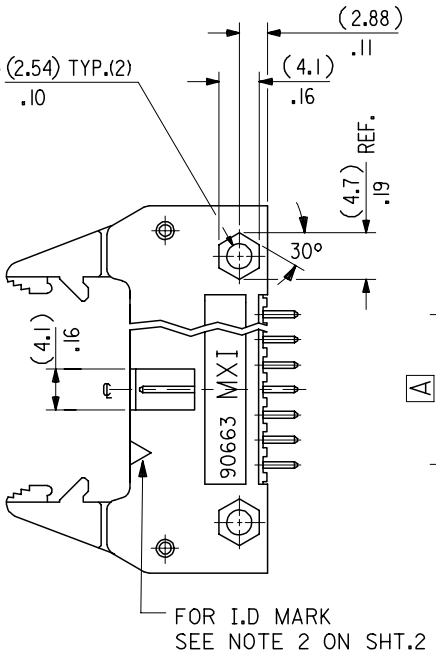

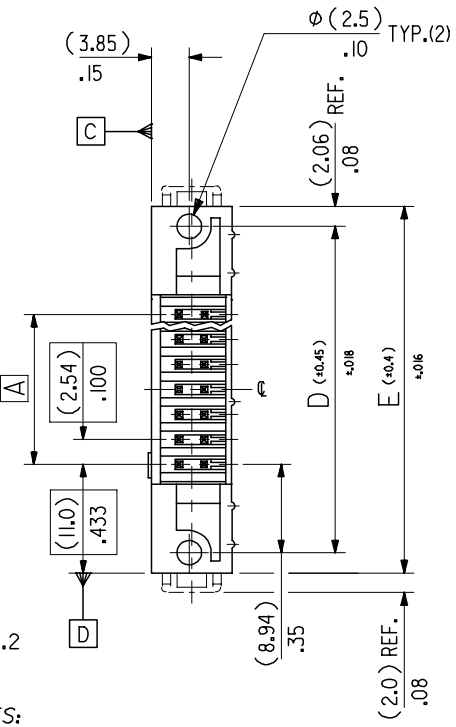

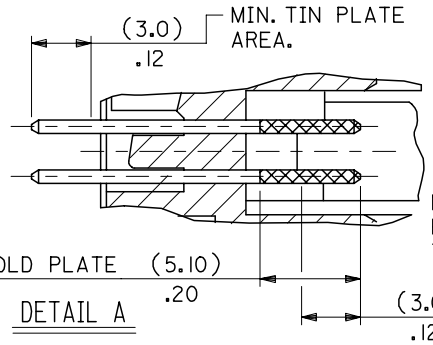

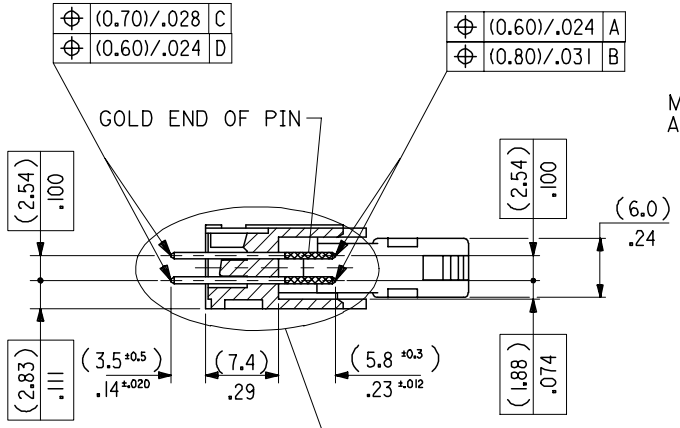

DIMENSIONS FOR SELECTIVE PLATING'S, SCALE 4:1

NOTES:

1. *FOR MATERIAL SPECIFICATION SEE NOTE 1. ON SHEET 2.*
2. *FOR RECOMMENDED P.C.B. HOLE PATTERN, PART No's AND UNSTATED DIMENSIONS SEE SHEET 2.*
3. *PRODUCT SPEC. No.: PS-99020-0015.*
4. *THIS RIB IS NOT PRESENT ON 10 & 14 CKT PARTS.*

REV	DESCRIPTION	
G	ADDED SHT 9	
	EC NO: E2007-0243	
	DRWN: DWASZKIEWI(CZ)	2007/01/10
	CHKD: J. DENNEHY	2007/01/22
	APPR: JDENNEHY	2007/01/23

QUALITY SYMBOLS
▼=0
Ⓒ=0

GENERAL TOLERANCES (UNLESS SPECIFIED)

	mm	INCH
4 PLACES	± ---	± ---
3 PLACES	± ---	±.008
2 PLACES	±0.20	±.008
1 PLACE	±0.20	± ---
ANGULAR ± 2 °		

DRAFT WHERE APPLICABLE MUST REMAIN WITHIN DIMENSIONS

DIMENSION STYLE	MM/IN
SCALE	2:1
DESIGN UNITS	METRIC
	THIRD ANGLE PROJECTION
DRAWN BY	POB
DATE	1990/08/03
CHECKED BY	JDENNEHY
DATE	2004/11/24
APPROVED BY	JDENNEHY
DATE	2004/11/24
MATERIAL NO.	SEE SHEET 2
TITLE	QF50 SRD HDR VT W/ELV
	MOLEX INCORPORATED
DOCUMENT NO.	SDA-90663E
SHEET NO.	1 OF 9
SIZE	A3

THIS DRAWING CONTAINS INFORMATION THAT IS PROPRIETARY TO MOLEX INCORPORATED AND SHOULD NOT BE USED WITHOUT WRITTEN PERMISSION

(78.74)/3.100	(86.34)/3.400	(90.52)/3.564	(96.62)/3.804	(100.74)/3.966	90663-1641	90663-1642	90663-1643		64
(73.66)/2.900	(81.26)/3.200	(85.44)/3.364	(91.54)/3.604	(95.66)/3.766	-1601	-1602	-1603		60
(60.96)/2.400	(68.56)/2.700	(72.74)/2.864	(78.84)/3.104	(82.96)/3.266	-1501	-1502	-1503	90663-1509	50
(48.26)/1.900	(55.86)/2.200	(60.04)/2.364	(66.14)/2.604	(70.26)/2.766	-1401	-1402	-1403	-1409	40
(40.64)/1.600	(48.24)/1.900	(52.42)/2.064	(58.52)/2.304	(62.64)/2.466	-1341	-1342	-1343	-1349	34
(35.56)/1.400	(43.16)/1.700	(47.34)/1.864	(53.44)/2.104	(57.56)/2.266	-1301	-1302	-1303	-1309	30
(30.48)/1.200	(38.08)/1.500	(42.26)/1.664	(48.36)/1.904	(52.48)/2.066	-1261	-1262	-1263	-1269	26
(22.86)/.900	(30.46)/1.200	(34.64)/1.364	(40.74)/1.604	(44.86)/1.766	-1201	-1202	-1203	-1209	20
(17.78)/.700	(25.38)/1.000	(29.56)/1.164	(35.66)/1.404	(39.78)/1.566	-1161	-1162	-1163	-1169	16
(15.24)/.600	(22.84)/.900	(27.02)/1.064	(33.12)/1.304	(37.24)/1.466	-1141	-1142	-1143	-1149	14
(10.16)/.400	(17.76)/.700	(21.94)/.864	(28.04)/1.104	(32.16)/1.266	90663-1101	90663-1102	90663-1103	90663-1109	10
A	B	C	D	E	ENG. NO. GS1 PLATING	ENG. NO. GS2 PLATING	ENG. NO. GS3 PLATING	ENG. NO. PRE TIN	NO.OF CKTS.

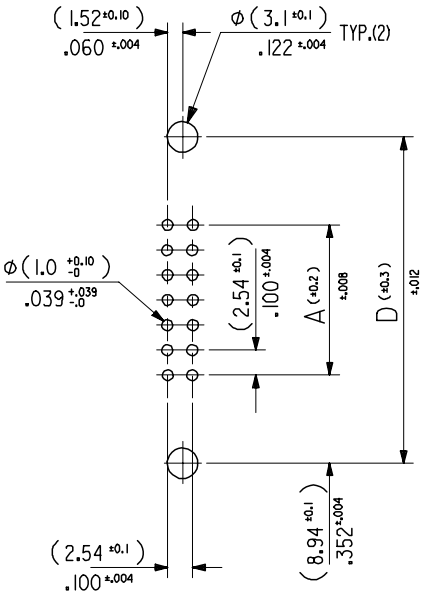

RECOMMENDED P.C.B.HOLE PATTERN.

NOTES

1.MATERIAL
HEADER : GLASS FILLED POLYESTER (UL 94V0), COLOUR - BLACK.
PINS : BRASS SIZE □ (0.635)/.025 .
LEVER : GLASS FILLED POLYESTER (UL 94V0), COLOUR - BLACK.

2.COLOUR IDENTIFICATION MARK FOR PLATING OPTIONS.
90663-1**1, (1um)/.039uin MIN. NICKEL UNDERPLATE. CONTACT AREA
GS1 PLATING (0.1um)/.004uin MIN. GOLD. SOLDER AREA (3um)/.118uin MIN.
TIN. COLOUR MARK: YELLOW.
90663-1**2, (1um)/.039uin MIN. NICKEL UNDERPLATE. CONTACT AREA
GS2 PLATING (0.76um)/.030uin MIN. GOLD. SOLDER AREA (3um)/.118uin MIN.
TIN. COLOUR MARK: BROWN.
90663-1**3, (1um)/.039uin MIN. NICKEL UNDERPLATE. CONTACT AREA
GS3 PLATING (0.25um)/.010uin MIN. GOLD. SOLDER AREA (3um)/.118uin MIN.
TIN. COLOUR MARK: BLUE.
90663-1**9, (0.5-1um)/.020-.040uin NICKEL UNDER (1.0-3.0um)/.039-.118uin TIN.
PRE-TIN COLOUR MARK: BLACK, (NO MARK).

3. RECOMMENDED PCB THICKNESS 1.6mm

ADDED NOTE 3 2007/09/13
EC NO: E2008-0129 2007/09/13
DRWN:DBYRNES CHKD: 2007/09/14
APPR:EOMAHONY DESCRIPTION
G REV

QUALITY SYMBOLS
▼=0
▽C=0

GENERAL TOLERANCES (UNLESS SPECIFIED)

	mm	INCH
4 PLACES	± ---	± ---
3 PLACES	± ---	±.008
2 PLACES	± 0.20	±.008
1 PLACE	± 0.20	± ---

ANGULAR ± 2 °

DRAFT WHERE APPLICABLE MUST REMAIN WITHIN DIMENSIONS

DIMENSION STYLE: MM/IN
SCALE: 2:1
DESIGN UNITS: METRIC
THIRD ANGLE PROJECTION

DRAWN BY: POB DATE: 1990/08/03
CHECKED BY: JDENNEHY DATE: 2004/11/24
APPROVED BY: JDENNEHY DATE: 2004/11/24

TITLE: QF50 SRD HDR VT W/ELV

MOLEX INCORPORATED

MATERIAL NO.: SEE CHART
DOCUMENT NO.: SDA-90663E
SHEET NO.: 2 OF 9

SIZE A3

THIS DRAWING CONTAINS INFORMATION THAT IS PROPRIETARY TO MOLEX INCORPORATED AND SHOULD NOT BE USED WITHOUT WRITTEN PERMISSION