This document was generated on 05/24/2010

PLEASE CHECK WWW.MOLEX.COM FOR LATEST PART INFORMATION

Part Number: 0901483391
Status: Active
Overview: cgrid__sl_products
Description: 2.54mm (.100") Pitch C-Grid® PC Board Connector, Single Row, Right Angle, 0.8µm (30µ") Gold (Au) Selective, 3 Circuits

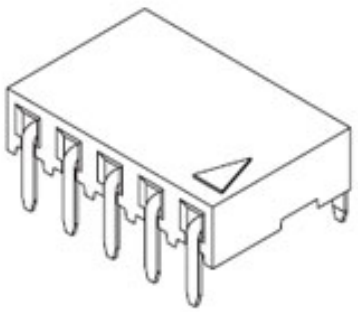

Series image - Reference only

Documents:
3D Model
Drawing (PDF)
RoHS Certificate of Compliance (PDF)

Agency Certification

CSA	LR19980
UL	E29179

General

Product Family	PCB Receptacles
Series	90148
Application	Board-to-Board
Overview	cgrid__sl_products
Product Name	C-Grid III™

Physical

Circuits (Loaded)	3
Circuits (maximum)	3
Color - Resin	Black
Durability (mating cycles max)	500
Flammability	94V-0
Glow-Wire Compliant	No
Guide to Mating Part	No
Keying to Mating Part	None
Lock to Mating Part	No
Material - Metal	Phosphor Bronze
Material - Plating Mating	Gold
Material - Plating Termination	Tin
Material - Resin	Polyester
Number of Rows	1
Orientation	Vertical
PC Tail Length (in)	0.114 In
PC Tail Length (mm)	2.90 mm
PCB Locator	No
PCB Retention	N/A
PCB Thickness Recommended (in)	0.063 In
PCB Thickness Recommended (mm)	1.60 mm
Packaging Type	Tube
Pitch - Mating Interface (in)	0.100 In
Pitch - Mating Interface (mm)	2.54 mm
Pitch - Term. Interface (in)	0.100 In
Pitch - Term. Interface (mm)	2.54 mm
Plating min: Mating (µin)	30.4
Plating min: Mating (µm)	0.76
Plating min: Termination (µin)	120
Plating min: Termination (µm)	3
Polarized to Mating Part	Yes
Polarized to PCB	No
Stackable	No
Surface Mount Compatible (SMC)	No

EU RoHS
ELV and RoHS Compliant
REACH SVHC
Contains SVHC: No
Halogen-Free Status
Not Reviewed

China RoHS

Need more information on product environmental compliance?

Email productcompliance@molex.com
For a multiple part number RoHS Certificate of Compliance, click here

Please visit the Contact Us section for any non-product compliance questions.

Search Parts in this Series
90148Series

Mates With
C-Grid III™ Header 90120 , 90121

Temperature Range - Operating	-55°C to +125°C
Termination Interface: Style	Through Hole

Electrical

Current - Maximum per Contact	3A
Grounding to PCB	No
Voltage - Maximum	350V AC/DC

Solder Process Data

Duration at Max. Process Temperature (seconds)	10
Lead-free Process Capability	Wave Capable (TH only)
Max. Cycles at Max. Process Temperature	1
Process Temperature max. C	260

Material Info

Reference - Drawing Numbers

Sales Drawing	RSD-90148-001

This document was generated on 05/24/2010
PLEASE CHECK WWW.MOLEX.COM FOR LATEST PART INFORMATION

NON-STANDARD PRODUCT

PART NO.	POLARISED CCT NO.	NO.OF CKTS.	DIM. A	DIM. B $\pm^{0}_{0.30}$	NO. PER TUBE
90148-3391	2	3	5.08	7.62	72

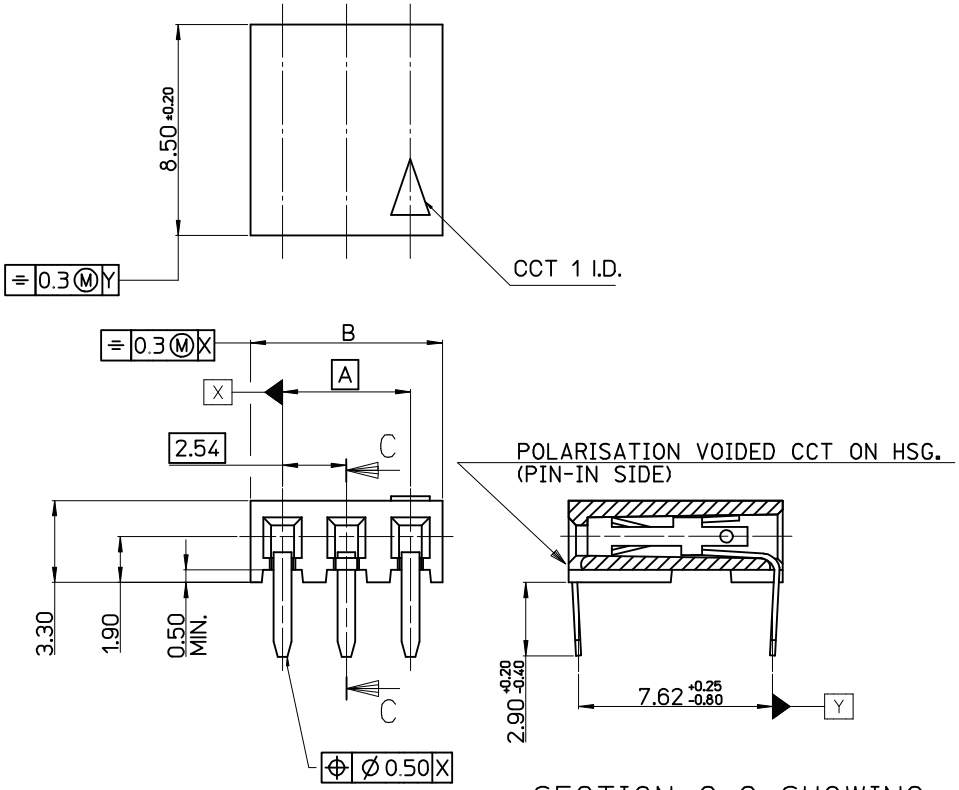

SECTION C-C SHOWING
POLARISED CCT

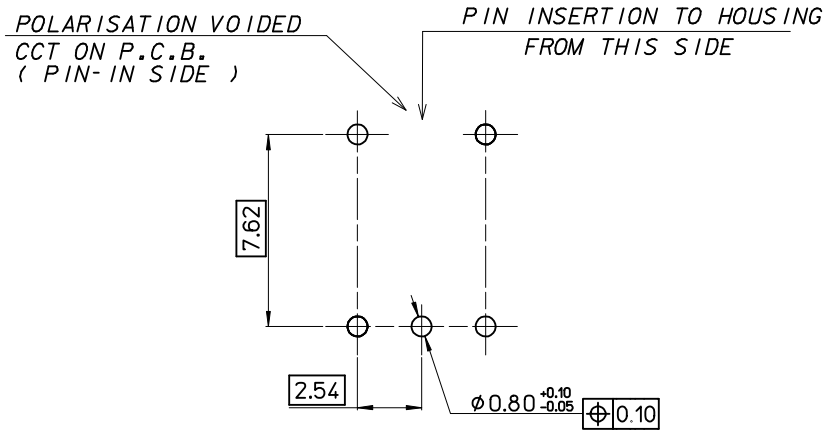

RECOMMENDED P.C. BOARD HOLE
PATTERN FOR STRAIGHT PINS
WITH POLARISATION

NOTES:
1. CONTACT - PHOSPHOR BRONZE.
2. HOUSING - POLYESTER (PBT), 15% GLASS FILL, UL 94 V-0. COLOUR: BLACK.
3. PLATING - 1.27 TO 1.78 µm NICKEL OVERALL, 0.76 TO 1.0 µm GOLD ON CONTACT AREA (OVER NICKEL). 3 TO 5 µm TIN ON SOLDER TAILS (OVER NICKEL).
4. FOR 0.635 SQ. MALE PINS THE LENGTH MUST BE 5.65 MIN AND 7.00 MAX. TO ENSURE GOOD CONNECTION WITH CONTACT.
5. PARTS NOT STACKABLE.

REMOVED COLOUR
EC NO: E2007-0823 2007/03/29
DRWN:DBYRNES 2007/03/29
CH'KD: 2007/04/04
APPR:EOMAHONY
DESCRIPTION
B
REV

QUALITY SYMBOLS
▼=0
Ⓒ=0

GENERAL TOLERANCES (UNLESS SPECIFIED)

	mm	INCH
4 PLACES	± ---	± ---
3 PLACES	± ---	± ---
2 PLACES	± 0.20	± ---
1 PLACE	± ---	± ---
ANGULAR ± 2 °		

DRAFT WHERE APPLICABLE MUST REMAIN WITHIN DIMENSIONS

DIMENSION STYLE: MM ONLY
SCALE: 5:1
DESIGN UNITS: METRIC
THIRD ANGLE PROJECTION
DRAWN BY DATE: DWASZKIEWICZ 2007/01/22
CHECKED BY DATE: D.MORIARTY
APPROVED BY DATE: J.DENNEHY
MATERIAL NO.: SEE CHART
TITLE: NON-STANDARD C-GRID III SINGLE ROW HORIZONTAL P.C. BOARD CONNECTOR
MOLEX INCORPORATED
DOCUMENT NO.: RSD-90148-001
SHEET NO.: 1 OF 1
SIZE: A3

THIS DRAWING CONTAINS INFORMATION THAT IS PROPRIETARY TO MOLEX INCORPORATED AND SHOULD NOT BE USED WITHOUT WRITTEN PERMISSION