This document was generated on 10/23/2017

PLEASE CHECK WWW.MOLEX.COM FOR LATEST PART INFORMATION

Part Number: 0901362218
Status: Active
Overview: C-Grid III™
Description: C-Grid III Header, Single Row, Right Angle, Shrouded, 18 Circuits, 0.38µm Gold (Au) Selective Plating

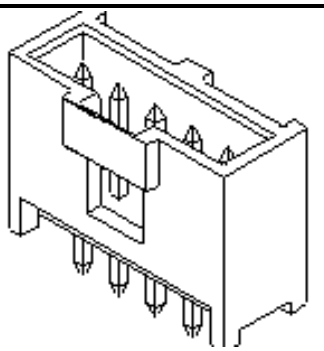

Series image - Reference only

Documents:

3D Model
Drawing (PDF)
Packaging Specification PK-90136-001 (PDF)
RoHS Certificate of Compliance (PDF)

Agency Certification

CSA	LR19980
UL	E29179

General

Product Family	PCB Headers
Series	90136
Application	Signal, Wire-to-Board
Overview	C-Grid III™
Product Name	C-Grid III
UPC	800753664784

Physical

Breakaway	No
Circuits (Loaded)	18
Circuits (maximum)	18
Color - Resin	Black
First Mate / Last Break	No
Flammability	94V-0
Glow-Wire Compliant	No
Guide to Mating Part	No
Keying to Mating Part	None
Lock to Mating Part	Yes
Material - Metal	Brass
Material - Plating Mating	Gold
Material - Plating Termination	Tin
Material - Resin	Polyester
Net Weight	2.720/g
Number of Rows	1
Orientation	Right Angle
PC Tail Length	2.90mm
PCB Locator	No
PCB Retention	None
PCB Thickness - Recommended	1.60mm
Packaging Type	Tray
Pitch - Mating Interface	2.54mm
Pitch - Termination Interface	2.54mm
Plating min - Mating	0.381µm
Plating min - Termination	3.048µm
Polarized to PCB	No
Shrouded	Fully
Stackable	No
Temperature Range - Operating	-55°C to +125°C
Termination Interface: Style	Through Hole

Electrical

Current - Maximum per Contact	3.0A

EU ELV
Not Relevant

EU RoHS
Compliant

China RoHS

REACH SVHC
Not Contained Per -ED/01/2017 (12 January 2017)

Halogen-Free Status
Not Low-Halogen

Need more information on product environmental compliance?

Email productcompliance@molex.com
Please visit the Contact Us section for any non-product compliance questions.

China ROHS	Green Image
ELV	Not Relevant
RoHS Phthalates	Not Contained

Search Parts in this Series
90136 Series

Mates With
90123 C-Grid III Modular Crimp Housing,
90156 C-Grid III Crimp Housing

Voltage - Maximum	350V AC/DC
Solder Process Data	
Lead-freeProcess Capability	WAVE
Material Info	
Reference - Drawing Numbers	
Packaging Specification	PK-90136-001
Sales Drawing	SDA-90136

This document was generated on 10/23/2017

PLEASE CHECK WWW.MOLEX.COM FOR LATEST PART INFORMATION