This document was generated on 05/25/2010

PLEASE CHECK WWW.MOLEX.COM FOR LATEST PART INFORMATION

Part Number: 0901301106
Status: Active
Overview: cgrid_iii
Description: 2.54mm (.100") Pitch C-Grid III™ Header, Dual Row, Vertical, Shrouded, Fully Loaded, 6 Circuits, Black, 3µm (118µ") Tin (Sn) over Nickel (Ni)

Documents:
3D Model
Drawing (PDF)
RoHS Certificate of Compliance (PDF)

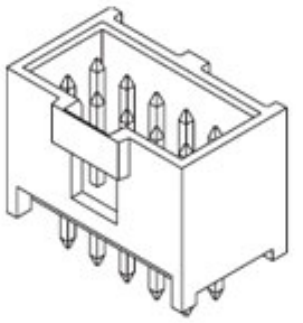

Series image - Reference only

General

Product Family	PCB Headers
Series	90130
Application	Wire-to-Board
Overview	cgrid_iii
Product Name	C-Grid III™

Physical

Breakaway	No
Circuits (Loaded)	6
Circuits (maximum)	6
Color - Resin	Black
Durability (mating cycles max)	30
First Mate / Last Break	No
Glow-Wire Compliant	No
Guide to Mating Part	No
Keying to Mating Part	None
Lock to Mating Part	Yes
Material - Metal	Brass
Material - Plating Mating	Tin
Material - Plating Termination	Tin
Material - Resin	Polyester
Number of Rows	2
Orientation	Vertical
PC Tail Length (in)	0.114 In
PC Tail Length (mm)	2.90 mm
PCB Locator	No
PCB Retention	None
PCB Thickness Recommended (in)	0.063 In
PCB Thickness Recommended (mm)	1.60 mm
Packaging Type	Tray
Pitch - Mating Interface (in)	0.100 In
Pitch - Mating Interface (mm)	2.54 mm
Pitch - Term. Interface (in)	0.100 In
Pitch - Term. Interface (mm)	2.54 mm
Plating min: Mating (µin)	118
Plating min: Mating (µm)	3
Plating min: Termination (µin)	118
Plating min: Termination (µm)	3
Polarized to Mating Part	Yes
Polarized to PCB	No
Shrouded	Closed Ends
Stackable	No
Temperature Range - Operating	-55°C to +125°C
Termination Interface: Style	Through Hole

EU RoHS
ELV and RoHS Compliant
REACH SVHC
Contains SVHC: No
Halogen-Free Status
Not Halogen-Free

China RoHS

Need more information on product environmental compliance?

Email productcompliance@molex.com
For a multiple part number RoHS Certificate of Compliance, click here

Please visit the Contact Us section for any non-product compliance questions.

Search Parts in this Series
90130Series

Mates With
90142 C-Grid III™ Crimp Housing

Electrical

Current - Maximum per Contact	3A
Voltage - Maximum	350V AC/DC

Solder Process Data

Duration at Max. Process Temperature (seconds)	5
Lead-free Process Capability	Wave Capable (TH only)
Process Temperature max. C	260

Material Info

Reference - Drawing Numbers

Packaging Specification	PK-90130-001, PK-91814-005
Sales Drawing	SDA-90130

This document was generated on 05/25/2010

PLEASE CHECK WWW.MOLEX.COM FOR LATEST PART INFORMATION

VERSION FULLY LOADED

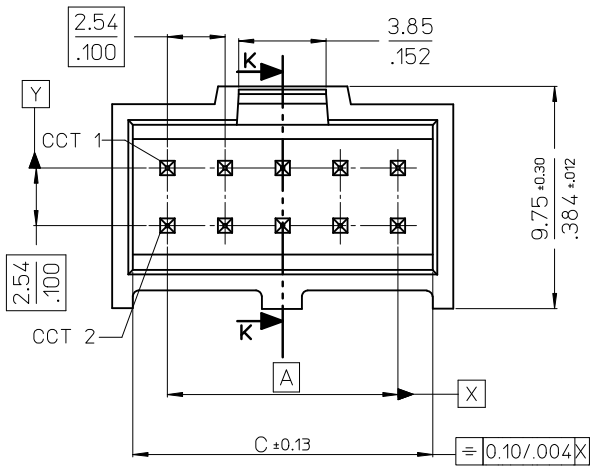

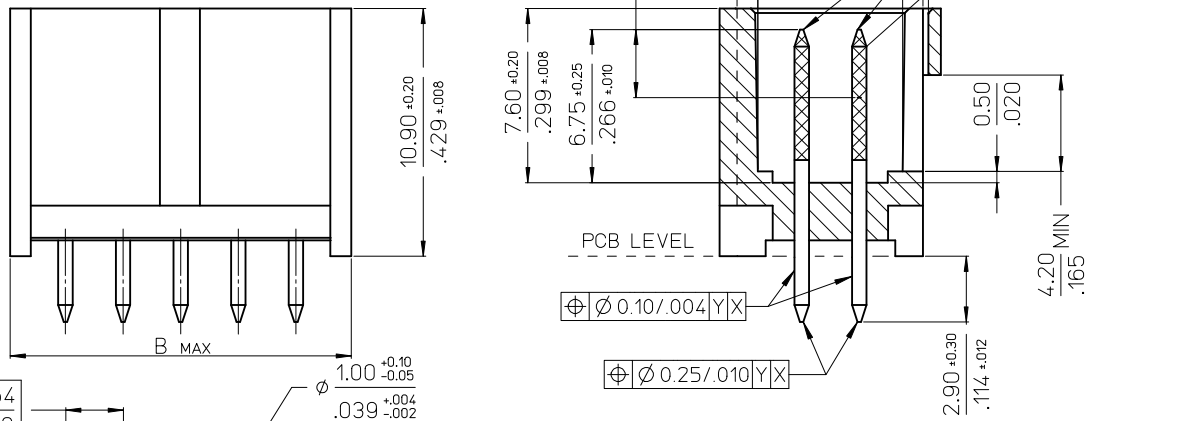

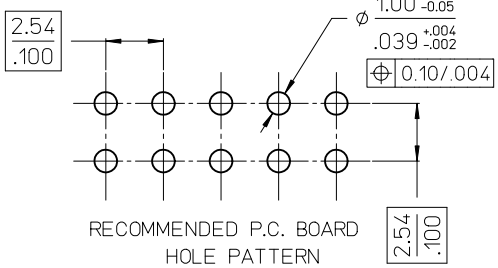

RECOMMENDED P.C. BOARD HOLE PATTERN

NOTES

1. MATERIAL:-
   - PIN:- (0.635)/.025 SQ. BRASS WIRE.
   - HOUSING:- 15% GLASS FILLED POLYESTER
   - UL 94 V-0 COLOUR BLACK
2. FOR PLATING VERSIONS AND VOID VERSIONS SEE SHEET 2.
3. MEASUREMENT POINT FOR MINIMUM PLATING THICKNESS.
4. FOR PRODUCT SPEC SEE PS-99020-0001
5. RECOMMENDED PCB THICKNESS: 1.6mm

No. OF CKTS	DIM A	DIM B	DIM C
6	(5.08)/ .200	(9.96)/ .392	(8.12)/ .320
8	(7.62)/ .300	(12.50)/ .492	(10.66)/ .420
10	(10.16)/ .400	(15.04)/ .592	(13.20)/ .520
12	(12.70)/ .500	(17.58)/ .692	(15.74)/ .620
14	(15.24)/ .600	(20.12)/ .792	(18.28)/ .720
16	(17.78)/ .700	(22.66)/ .892	(20.82)/ .820
18	(20.32)/ .800	(25.20)/ .992	(23.36)/ .920
20	(22.86)/ .900	(27.74)/1.092	(25.90)/1.020
22	(25.40)/1.000	(30.28)/1.192	(28.44)/1.120
24	(27.94)/1.100	(32.82)/1.292	(30.98)/1.220
26	(30.48)/1.200	(35.36)/1.392	(33.52)/1.320
28	(33.02)/1.300	(37.90)/1.492	(36.06)/1.420
30	(35.56)/1.400	(40.44)/1.592	(38.60)/1.520
32	(38.10)/1.500	(42.98)/1.692	(41.15)/1.620
34	(40.64)/1.600	(45.52)/1.792	(43.68)/1.720
36	(43.18)/1.700	(48.06)/1.892	(46.22)/1.820
38	(45.72)/1.800	(50.60)/1.992	(48.76)/1.920
40	(48.26)/1.900	(53.14)/2.092	(51.30)/2.020
42	(50.80)/2.000	(55.68)/2.192	(53.84)/2.120
44	(53.34)/2.100	(58.22)/2.292	(56.38)/2.220
46	(55.88)/2.200	(60.76)/2.392	(58.92)/2.320
48	(58.42)/2.300	(63.30)/2.492	(61.46)/2.420
50	(60.96)/2.400	(65.84)/2.592	(64.00)/2.520
52	(63.50)/2.500	(68.38)/2.692	(66.54)/2.620
54	(66.04)/2.600	(70.92)/2.792	(69.08)/2.720
56	(68.58)/2.700	(73.46)/2.892	(71.62)/2.820
58	(71.12)/2.800	(76.00)/2.992	(74.16)/2.920
60	(73.66)/2.900	(78.54)/3.092	(76.70)/3.020
62	(76.20)/3.000	(81.08)/3.192	(79.24)/3.120
64	(78.74)/3.100	(83.62)/3.292	(81.78)/3.220
66	(81.28)/3.200	(86.16)/3.392	(84.32)/3.320
68	(83.82)/3.300	(88.70)/3.492	(86.86)/3.420

RE-POSITION DIM B 2010/03/25
EC NO: S2010-0811 2010/03/31
DRWN:SKANG 2010/03/31
CHKD:ATSEE
APPR:MLONG
DESCRIPTION
REV B1

QUALITY SYMBOLS
FA=0
FC=0
FP=0

GENERAL TOLERANCES (UNLESS SPECIFIED)

	mm	INCH
4 PLACES	± ---	± ---
3 PLACES	± ---	±.004
2 PLACES	± 0.10	± ---
1 PLACE	± ---	± ---
ANGULAR ±1/2°		

DRAFT WHERE APPLICABLE MUST REMAIN WITHIN DIMENSIONS

DIMENSION STYLE: MM/IN
SCALE: NTS
DESIGN UNITS: METRIC
THIRD ANGLE PROJECTION

DRAWN BY: KS DATE: 1988/08/23
CHECKED BY: ATSEE DATE: 2010/02/11
APPROVED BY: MLONG DATE: 2010/02/19
MATERIAL NO.: SEE TABLE

TITLE: C-GRID III DUAL ROW STRAIGHT SHROUDED HEADER
MOLEX INCORPORATED
DOCUMENT NO.: SDA-90130
SHEET NO.: 1 OF 4

SIZE A3

THIS DRAWING CONTAINS INFORMATION THAT IS PROPRIETARY TO MOLEX INCORPORATED AND SHOULD NOT BE USED WITHOUT WRITTEN PERMISSION

NO OF CKTS	HSG CKT SIZE	PART NUMBER PLATING TYPE A	PLATING TYPE E	PLATING TYPE F
6	6	90130-X106	90130-X206	90130-X306
8	8	X108	X208	X308
10	10	X110	X210	X310
12	12	X112	X212	X312
14	14	X114	X214	X314
16	16	X116	X216	X316
18	18	X118	X218	X318
20	20	X120	X220	X320
22	22	X122	X222	X322
24	24	X124	X224	X324
26	26	X126	X226	X326
28	28	X128	X228	X328
30	30	X130	X230	X330
32	32	X132	X232	X332
34	34	X134	X234	X334
36	36	X136	X236	X336
38	38	X138	X238	X338
40	40	X140	X240	X340
42	42	X142	X242	X342
44	44	X144	X244	X344
46	46	X146	X246	X346
48	48	X148	X248	X348
50	50	X150	X250	X350
52	52	X152	X252	X352
54	54	X154	X254	X354
56	56	X156	X256	X356
58	58	X158	X258	X358
60	60	X160	X260	X360
62	62	X162	X262	X362
64	64	X164	X264	X364
66	66	X166	X266	X366
68	68	90130-X168	90130-X268	90130-X368

VERSION FULLY LOADED

NOTES:
1. FOR ASSY SEE SHEET 1.
2. FOR PLATING DETAILS SEE SDES-99000-0003

90130 - X X X X

INDICATES CIRCUIT HOUSING SIZE
(EXCEPTION ON VOIDED OPTION -
SEE TABLE FOR HOUSING CIRCUIT SIZE)

PLATING
1 - TYPE A
2 - TYPE E
3 - TYPE F
4 - TYPE G

STYLE: - STRAIGHT ASSY
- 1. VERSION FULLY LOADED BLACK
8. VERSION WITH VOIDS

NO OF CKTS	HSG CKT SIZE	VOIDED PART NUMBER	VOID POSITION	PLATING TYPE
11	12	90130-8212	12	E
9	10	90130-8309	2	F
9	10	90130-8311	1	F
11	12	90130-8213	2	E
11	12	90130-8313	2	F

VOIDED OPTION

RE-POSITION DIM B
EC NO: S2010-0811
DRWN:SKANG 2010/03/25
CH'KD:ATSEE 2010/03/31
APPR:MLONG 2010/03/31
DESCRIPTION
REV
B1

QUALITY SYMBOLS
FA=0
FC=0
FP=0

GENERAL TOLERANCES (UNLESS SPECIFIED)

	mm	INCH
4 PLACES	± ---	± ---
3 PLACES	± ---	± .004
2 PLACES	± 0.10	± ---
1 PLACE	± ---	± ---
ANGULAR ±1/2°		

DRAFT WHERE APPLICABLE MUST REMAIN WITHIN DIMENSIONS

DIMENSION STYLE: MM/IN
SCALE: NTS
DESIGN UNITS: METRIC
THIRD ANGLE PROJECTION

DRAWN BY: KS DATE: 1988/08/23
CHECKED BY: ATSEE DATE: 2010/02/11
APPROVED BY: MLONG DATE: 2010/02/19

TITLE: C-GRID III DUAL ROW STRAIGHT SHROUDED HEADER
MOLEX INCORPORATED
MATERIAL NO.: SEE TABLE
DOCUMENT NO.: SDA-90130
SHEET NO.: 2 OF 4
SIZE: A3

THIS DRAWING CONTAINS INFORMATION THAT IS PROPRIETARY TO MOLEX INCORPORATED AND SHOULD NOT BE USED WITHOUT WRITTEN PERMISSION

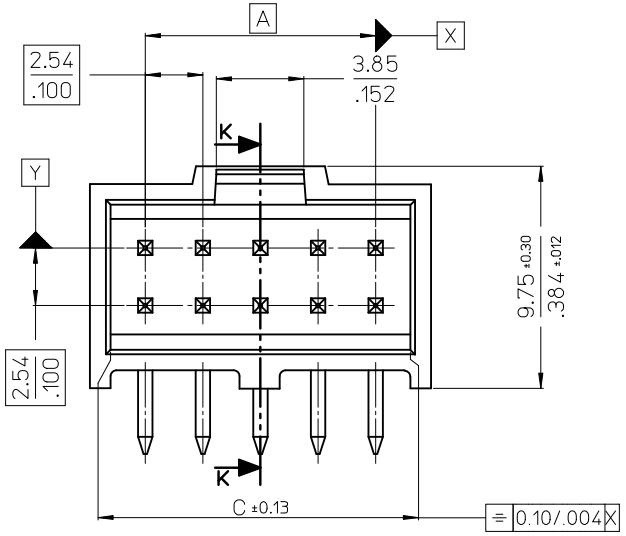

VERSION FULLY LOADED

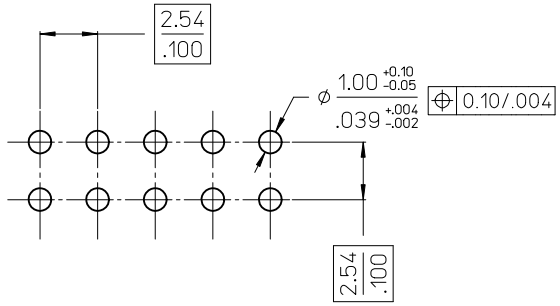

RECOMMENDED P.C. BOARD
HOLE PATTERN

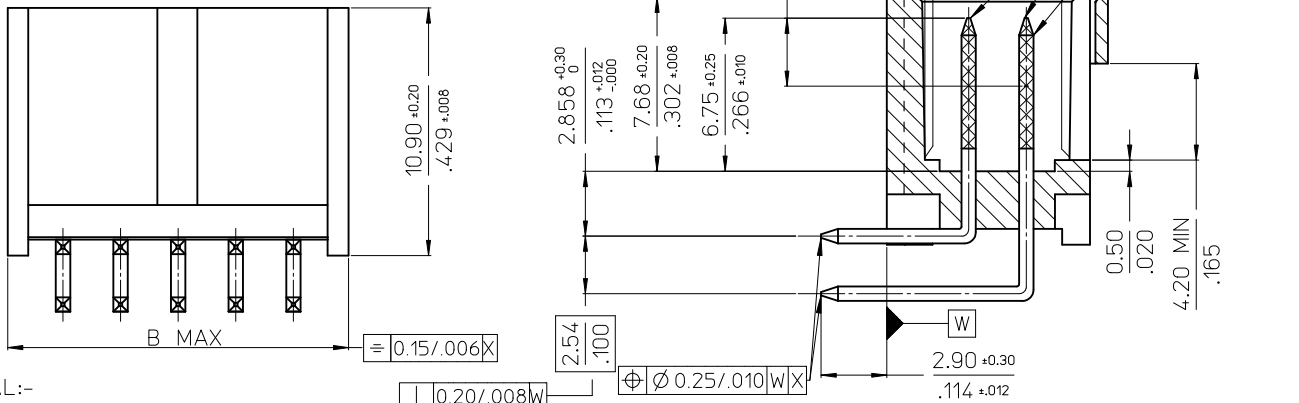

HSG CKT SIZE	A	B	C
6	(5.08) .200	(10.34) .407	(7.92) .312
8	(7.62) .300	(12.88) .507	(10.46) .412
10	(10.16) .400	(15.42) .607	(13.00) .512
12	(12.70) .500	(17.96) .707	(15.54) .612
14	(15.24) .600	(20.50) .807	(18.08) .712
16	(17.78) .700	(23.04) .907	(20.62) .812
18	(20.32) .800	(25.58) 1.007	(23.16) .912
20	(22.86) .900	(28.12) 1.107	(25.70) 1.012
22	(25.40) 1.000	(30.66) 1.207	(28.24) 1.112
24	(27.94) 1.100	(33.20) 1.307	(30.78) 1.212
26	(30.48) 1.200	(35.74) 1.407	(33.32) 1.312
28	(33.02)/1.300	(37.90)/1.492	(36.06)/1.420
30	(35.56) 1.400	(40.82) 1.607	(38.40) 1.512
32	(38.10)/1.500	(42.98)/1.692	(41.15)/1.620
34	(40.64) 1.600	(45.90) 1.807	(43.48) 1.712
36	(43.18)/1.700	(48.06)/1.892	(46.22)/1.820
38	(45.72) 1.800	(50.98) 2.007	(48.56) 1.912
40	(48.26) 1.900	(53.52) 2.107	(51.10) 2.012
42	(50.80)/2.000	(55.68)/2.192	(53.84)/2.120
44	(53.34) 2.100	(58.60) 2.307	(56.18) 2.212
46	(55.88)/2.200	(60.76)/2.392	(58.92)/2.320
48	(58.42)/2.300	(63.30)/2.492	(61.46)/2.420
50	(60.96) 2.400	(66.22) 2.607	(63.80) 2.512
52	(63.50)/2.500	(68.38)/2.692	(66.54)/2.620
54	(66.04) 2.600	(71.30) 2.807	(68.88) 2.712
56	(68.58)/2.700	(73.46)/2.892	(71.62)/2.820
58	(71.12)/2.800	(76.00)/2.992	(74.16)/2.920
60	(73.66) 2.900	(78.92) 3.107	(76.50) 3.012
62	(76.20)/3.000	(81.08)/3.192	(79.24)/3.120
64	(78.74) 3.100	(84.00) 3.307	(81.58) 3.212
66	(81.28)/3.200	(86.16)/3.392	(84.32)/3.320
68	(83.82) 3.300	(89.08) 3.507	(86.66) 3.412

NOTES

1.MATERIAL:-
- PIN:- (0.635)/.025 SQ. BRASS WIRE.
- HOUSING:- 15% GLASS FILLED POLYESTER
- UL 94 V-0 COLOUR BLACK

2.FOR PLATING VERSIONS AND VOID VERSIONS SEE SHEET 2.

3.MEASUREMENT POINT FOR MINIMUM PLATING THICKNESS.

4.FOR PRODUCT SPEC SEE PS-99020-0001

5.RECOMMENDED PCB THICKNESS: 1.6mm

RE-POSITION DIM B
EC NO: S2010-0811
DRWN:SKANG 2010/03/25
CH'KD:ATSEE 2010/03/31
APPR:MLONG 2010/03/31
DESCRIPTION
B1
REV

QUALITY SYMBOLS
FA=0
FC=0
FB=0

GENERAL TOLERANCES (UNLESS SPECIFIED)

	mm	INCH
4 PLACES	± ---	± ---
3 PLACES	± ---	±.004
2 PLACES	±0.10	± ---
1 PLACE	± ---	± ---
ANGULAR ±1/2°		

DRAFT WHERE APPLICABLE MUST REMAIN WITHIN DIMENSIONS

DIMENSION STYLE: MM/IN
SCALE: NTS
DESIGN UNITS: METRIC
THIRD ANGLE PROJECTION

DRAWN BY: KS DATE: 1988/08/23
CHECKED BY: ATSEE DATE: 2010/02/11
APPROVED BY: MLONG DATE: 2010/02/19

TITLE: C-GRID III DUAL ROW STRAIGHT SHROUDED HEADER

MOLEX INCORPORATED

MATERIAL NO.: SEE TABLE
DOCUMENT NO.: SDA-90130
SHEET NO.: 3 OF 4

SIZE A3

THIS DRAWING CONTAINS INFORMATION THAT IS PROPRIETARY TO MOLEX INCORPORATED AND SHOULD NOT BE USED WITHOUT WRITTEN PERMISSION

NO OF CKTS	HSG CKT SIZE	PART NUMBER PLATING TYPE A	PLATING TYPE E	PLATING TYPE F
6	6	90130-X106	90130-X206	90130-X306
8	8	X108	X208	X308
10	10	X110	X210	X310
12	12	X112	X212	X312
14	14	X114	X214	X314
16	16	X116	X216	X316
18	18	X118	X218	X318
20	20	X120	X220	X320
22	22	X122	X222	X322
24	24	X124	X224	X324
26	26	X126	X226	X326
28	28	X128	X228	X328
30	30	X130	X230	X330
32	32	X132	X232	X332
34	34	X134	X234	X334
36	36	X136	X236	X336
38	38	X138	X238	X338
40	40	X140	X240	X340
42	42	X142	X242	X342
44	44	X144	X244	X344
46	46	X146	X246	X346
48	48	X148	X248	X348
50	50	X150	X250	X350
52	52	X152	X252	X352
54	54	X154	X254	X354
56	56	X156	X256	X356
58	58	X158	X258	X358
60	60	X160	X260	X360
62	62	X162	X262	X362
64	64	X164	X264	X364
66	66	X166	X266	X366
68	68	90130-X168	90130-X268	90130-X368

NOTES:
1. FOR ASSY SEE SHEET 3.
2. FOR PLATING DETAILS SEE SDES-99000-0003

90130 - * * * *

- INDICATES CIRCUIT HOUSING SIZE
- PLATING
  - 1 - TYPE A
  - 2 - TYPE E
  - 3 - TYPE F
- STYLE: - RIGHT ANGLE ASSY
  - 3 VERSION FULLY LOADED BLACK

VERSION FULLY LOADED

RE-POSITION DIM B
EC NO: S2010-0811
DRWN:SKANG 2010/03/25
CH'KD:ATSEE 2010/03/31
APPR:MLONG 2010/03/31
DESCRIPTION
REV
B1

QUALITY SYMBOLS
FA=0
FC=0
FP=0

GENERAL TOLERANCES (UNLESS SPECIFIED)

	mm	INCH
4 PLACES	± ---	± ---
3 PLACES	± ---	± .004
2 PLACES	± 0.10	± ---
1 PLACE	± ---	± ---
ANGULAR ±1/2°		

DRAFT WHERE APPLICABLE MUST REMAIN WITHIN DIMENSIONS

DIMENSION STYLE: MM/IN
SCALE: NTS
DESIGN UNITS: METRIC
THIRD ANGLE PROJECTION

DRAWN BY: KS DATE: 1988/08/23
CHECKED BY: ATSEE DATE: 2010/02/11
APPROVED BY: MLONG DATE: 2010/02/19

TITLE: C-GRID III DUAL ROW STRAIGHT SHROUDED HEADER
MOLEX INCORPORATED
MATERIAL NO.: SEE TABLE
DOCUMENT NO.: SDA-90130
SHEET NO.: 4 OF 4
SIZE: A3

THIS DRAWING CONTAINS INFORMATION THAT IS PROPRIETARY TO MOLEX INCORPORATED AND SHOULD NOT BE USED WITHOUT WRITTEN PERMISSION

NO OF CKTS	HSG CKT SIZE	PART NUMBER PLATING TYPE A	PLATING TYPE E	PLATING TYPE F
6	6	90130-X106	90130-X206	90130-X306
8	8	X108	X208	X308
10	10	X110	X210	X310
12	12	X112	X212	X312
14	14	X114	X214	X314
16	16	X116	X216	X316
18	18	X118	X218	X318
20	20	X120	X220	X320
22	22	X122	X222	X322
24	24	X124	X224	X324
26	26	X126	X226	X326
28	28	X128	X228	X328
30	30	X130	X230	X330
32	32	X132	X232	X332
34	34	X134	X234	X334
36	36	X136	X236	X336
38	38	X138	X238	X338
40	40	X140	X240	X340
42	42	X142	X242	X342
44	44	X144	X244	X344
46	46	X146	X246	X346
48	48	X148	X248	X348
50	50	X150	X250	X350
52	52	X152	X252	X352
54	54	X154	X254	X354
56	56	X156	X256	X356
58	58	X158	X258	X358
60	60	X160	X260	X360
62	62	X162	X262	X362
64	64	X164	X264	X364
66	66	X166	X266	X366
68	68	90130-X168	90130-X268	90130-X368

VERSION FULLY LOADED

NO OF CKTS	HSG CKT SIZE	VOIDED PART NUMBER	VOID POSITION	PLATING TYPE
11	12	90130-8212	12	E
9	10	90130-8309	2	F
9	10	90130-8311	1	F
11	12	90130-8213	2	E
11	12	90130-8313	2	F

VOIDED OPTION

NOTES:

1. *FOR ASSY SEE SHEET 1.*
2. *FOR PLATING DETAILS SEE SDES-99000-0003*

90130 - x x x x

- *INDICATES CIRCUIT HOUSING SIZE*
  (EXCEPTION ON VOIDED OPTION - SEE TABLE FOR HOUSING CIRCUIT SIZE)
- *PLATING*
  - *1 - TYPE A*
  - *2 - TYPE E*
  - *3 - TYPE F*
  - *4 - TYPE G*
- *STYLE: - STRAIGHT ASSY*
  - *1. VERSION FULLY LOADED BLACK*
  - *8. VERSION WITH VOIDS*

Changed 8212 to void 2
EC NO: E2010-0123
DRWN:BMAGUIRE 2009/10/15
CH'KD: 2009/10/15
APPR:BMAGUIRE 2009/10/15
DESCRIPTION
Z
REV

QUALITY SYMBOLS
▼=0
Ⓒ=0

GENERAL TOLERANCES (UNLESS SPECIFIED)

	mm	INCH
4 PLACES	± ---	± ---
3 PLACES	± ---	± ---
2 PLACES	± ---	± ---
1 PLACE	± ---	± ---
ANGULAR ±---°		

DRAFT WHERE APPLICABLE MUST REMAIN WITHIN DIMENSIONS

DIMENSION STYLE: MM ONLY
SCALE: 1:1
DESIGN UNITS: METRIC
THIRD ANGLE PROJECTION
DRAWN BY: KS DATE: 1987/09/10
CHECKED BY: DATE:
APPROVED BY: DATE:
TITLE: C-GRID III DUAL ROW STRAIGHT SHROUDED HEADER
molex MOLEX INCORPORATED
MATERIAL NO.: SEE CHART
DOCUMENT NO.: SDA-90130
SHEET NO.: 2 OF 4
SIZE: A2

THIS DRAWING CONTAINS INFORMATION THAT IS PROPRIETARY TO MOLEX INCORPORATED AND SHOULD NOT BE USED WITHOUT WRITTEN PERMISSION