This document was generated on 05/26/2010

PLEASE CHECK WWW.MOLEX.COM FOR LATEST PART INFORMATION

Part Number: 0901200766
Status: Active
Overview: cgrid_iii
Description: 2.54mm (.100") Pitch C-Grid III™ Header, Single Row, Vertical, 6 Circuits, 0.38µm (15µ") Gold (Au) Selective Plating

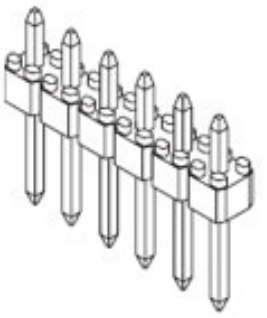

Series image - Reference only

Documents:
3D Model
Drawing (PDF)
RoHS Certificate of Compliance (PDF)

General

Product Family	PCB Headers
Series	90120
Application	Wire-to-Board
Overview	cgrid_iii
Product Name	C-Grid III™

Physical

Breakaway	Yes
Circuits (Loaded)	6
Circuits (maximum)	6
Color - Resin	Black
First Mate / Last Break	No
Glow-Wire Compliant	No
Guide to Mating Part	No
Keying to Mating Part	None
Lock to Mating Part	None
Material - Metal	Brass
Material - Plating Mating	Gold
Material - Plating Termination	Tin
Material - Resin	Polyester
Number of Rows	1
Orientation	Vertical
PC Tail Length (in)	0.114 In
PC Tail Length (mm)	2.90 mm
PCB Locator	No
PCB Retention	None
Packaging Type	Bag
Pitch - Mating Interface (in)	0.100 In
Pitch - Mating Interface (mm)	2.54 mm
Plating min: Mating (µin)	15
Plating min: Mating (µm)	0.38
Polarized to Mating Part	No
Polarized to PCB	No
Shrouded	No
Stackable	No
Temperature Range - Operating	-55°C to +125°C
Termination Interface: Style	Through Hole

Electrical

Current - Maximum per Contact	3A
Voltage - Maximum	350V

Solder Process Data

Duration at Max. Process Temperature (seconds)	5
Lead-free Process Capability	Wave Capable (TH only)

EU RoHS
ELV and RoHS Compliant
REACH SVHC
Contains SVHC: No
Halogen-Free Status
Not Halogen-Free

China RoHS

Need more information on product environmental compliance?

Email productcompliance@molex.com
For a multiple part number RoHS Certificate of Compliance, click here

Please visit the Contact Us section for any non-product compliance questions.

Search Parts in this Series
90120Series

Mates With
90147 C-Grid® PC Board Connector. 90123 C-Grid III™ Modular Crimp Housing

Max. Cycles at Max. Process Temperature	1
Process Temperature max. C	230

Material Info

Reference - Drawing Numbers

Sales Drawing	SDA-90120

This document was generated on 05/26/2010

PLEASE CHECK WWW.MOLEX.COM FOR LATEST PART INFORMATION

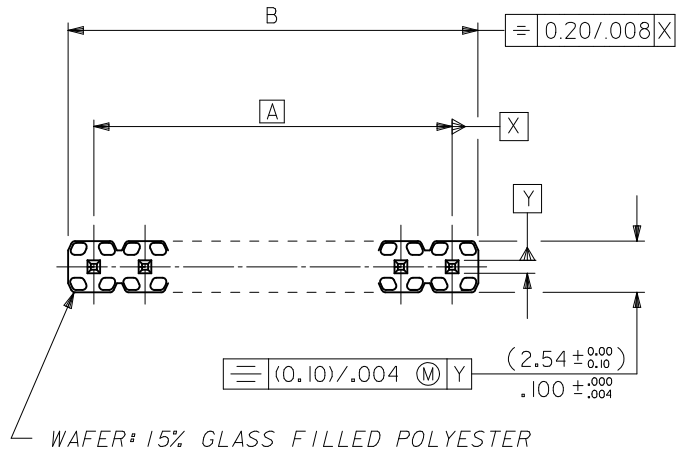

CKT SIZE	DIM." A"	DIM." B" (+0 -0.45) +0 -.018	CKT SIZE	DIM." A"	DIM." B" (+0 -0.45) +0 -.018
IX 1	———	(2.54) .100	IX21	(50.80) 2.000	(53.34) 2.100
IX 2	(2.54) .100	(5.08) .200	IX22	(53.34) 2.100	(55.88) 2.200
IX 3	(5.08) .200	(7.62) .300	IX23	(55.88) 2.200	(58.42) 2.300
IX 4	(7.62) .300	(10.16) .400	IX24	(58.42) 2.300	(60.96) 2.400
IX 5	(10.16) .400	(12.70) .500	IX25	(60.96) 2.400	(63.50) 2.500
IX 6	(12.70) .500	(15.24) .600	IX26	(63.50) 2.500	(66.04) 2.600
IX 7	(15.24) .600	(17.78) .700	IX27	(66.04) 2.600	(68.58) 2.700
IX 8	(17.78) .700	(20.32) .800	IX28	(68.58) 2.700	(71.12) 2.800
IX 9	(20.32) .800	(22.86) .900	IX29	(71.12) 2.800	(73.66) 2.900
IX10	(22.86) .900	(25.40) 1.000	IX30	(73.66) 2.900	(76.20) 3.000
IX11	(25.40) 1.000	(27.94) 1.100	IX31	(76.20) 3.000	(78.74) 3.100
IX12	(27.94) 1.100	(30.48) 1.200	IX32	(78.74) 3.100	(81.28) 3.200
IX13	(30.48) 1.200	(33.02) 1.300	IX33	(81.28) 3.200	(83.82) 3.300
IX14	(33.02) 1.300	(35.56) 1.400	IX34	(83.82) 3.300	(86.36) 3.400
IX15	(35.56) 1.400	(38.10) 1.500	IX35	(86.36) 3.400	(88.90) 3.500
IX16	(38.10) 1.500	(40.64) 1.600	IX36	(88.90) 3.500	(91.44) 3.600
IX17	(40.64) 1.600	(43.18) 1.700	IX37	(91.44) 3.600	(93.98) 3.700
IX18	(43.18) 1.700	(45.72) 1.800	IX38	(93.98) 3.700	(96.52) 3.800
IX19	(45.72) 1.800	(48.26) 1.900	IX39	(96.52) 3.800	(99.06) 3.900
IX20	(48.26) 1.900	(50.80) 2.000	IX40	(99.06) 3.900	(101.60) 4.000

NOTES

1. FOR ASSY NUMBERS WITH FINISH OPTIONS AND DIM'S C & D SEE SHEETS 2 TO 6.
2. PRODUCT SPEC: PS-99020-0001
3. RECOMMENDED PCB THICKNESS 1.6mm

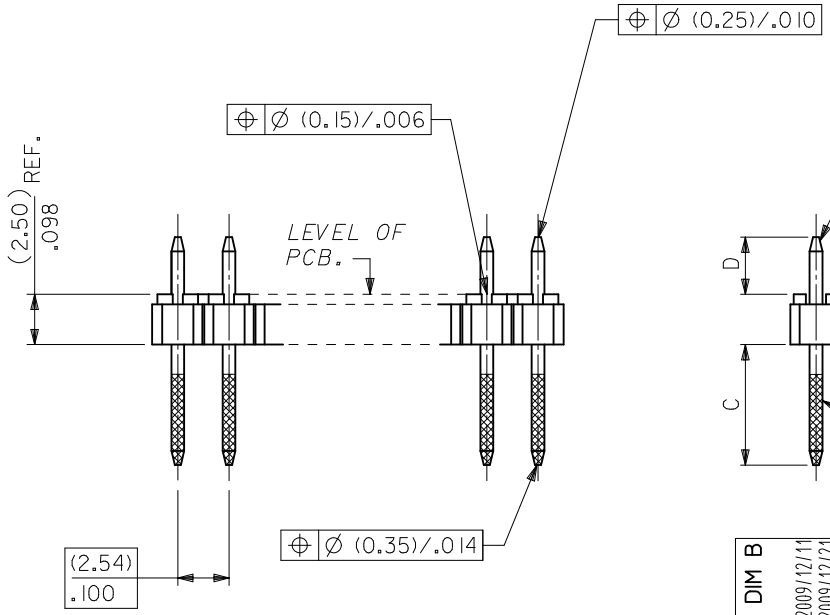

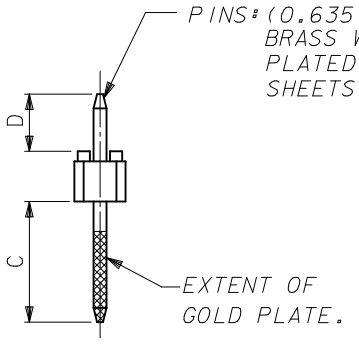

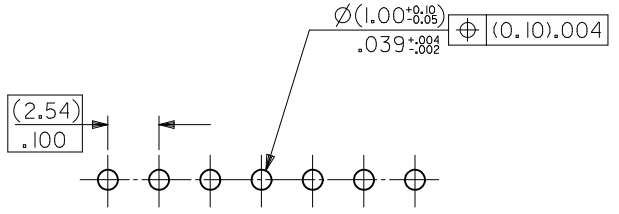

RECOMMENDED P.C. BOARD HOLE PATTERN

REV GD&T FOR DIM B
EC NO: S2010-0493 2009/12/11
DRWN:SKANG 2009/12/21
CH'KD:ATSEE 2009/12/21
APPR:MLONG
DESCRIPTION
REV
N1

QUALITY SYMBOLS
FA=0
FC=0
FP=0

GENERAL TOLERANCES (UNLESS SPECIFIED)

	mm	INCH
4 PLACES	± ---	± ---
3 PLACES	± ---	± ---
2 PLACES	± ---	± ---
1 PLACE	± ---	± ---
ANGULAR ±---°		

DRAFT WHERE APPLICABLE MUST REMAIN WITHIN DIMENSIONS

DIMENSION STYLE: MM/IN
SCALE: NTS
DESIGN UNITS: METRIC
THIRD ANGLE PROJECTION

DRAWN BY: JDENNEHY DATE: 2006/01/18
CHECKED BY: DWASZKIEWICZ DATE: 2006/01/18
APPROVED BY: MLONG DATE: 2009/12/21

TITLE: C-GRID III SINGLE ROW STRAIGHT PIN HEADER

MOLEX INCORPORATED

MATERIAL NO.: SEE TABLE
DOCUMENT NO.: SDA-90120
SHEET NO.: 1 OF 6
SIZE: A3

THIS DRAWING CONTAINS INFORMATION THAT IS PROPRIETARY TO MOLEX INCORPORATED AND SHOULD NOT BE USED WITHOUT WRITTEN PERMISSION

CIRCUIT SIZE	PLATING TYPE A		PLATING TYPE E		PLATING TYPE F	
	PART NO.	CUSTOMER SPECIFIC PART NO.	PART NO.	CUSTOMER SPECIFIC PART NO.	PART NO.	CUSTOMER SPECIFIC PART NO.
1 X 1	90120-0121	90120-9121	90120-0761	90120-9761	90120-0921	90120-9921
1 X 2	-0122	-9122	-0762	-9762	-0922	-9922
1 X 3	-0123	-9123	-0763	-9763	-0923	-9923
1 X 4	-0124	-9124	-0764	-9764	-0924	-9924
1 X 5	-0125	-9125	-0765	-9765	-0925	-9925
1 X 6	-0126	-9126	-0766	-9766	-0926	-9926
1 X 7	-0127	-9127	-0767	-9767	-0927	-9927
1 X 8	-0128	-9128	-0768	-9768	-0928	-9928
1 X 9	-0129	-9129	-0769	-9769	-0929	-9929
1 X 10	-0130	-9130	-0770	-9770	-0930	-9930
1 X 11	-0131	-9131	-0771	-9771	-0931	-9931
1 X 12	-0132	-9132	-0772	-9772	-0932	-9932
1 X 13	-0133	-9133	-0773	-9773	-0933	-9933
1 X 14	-0134	-9134	-0774	-9774	-0934	-9934
1 X 15	-0135	-9135	-0775	-9775	-0935	-9935
1 X 16	-0136	-9136	-0776	-9776	-0936	-9936
1 X 17	-0137	-9137	-0777	-9777	-0937	-9937
1 X 18	-0138	-9138	-0778	-9778	-0938	-9938
1 X 19	-0139	-9139	-0779	-9779	-0939	-9939
1 X 20	-0140	-9140	-0780	-9780	-0940	-9940
1 X 21	-0141	-9141	-0781	-9781	-0941	-9941
1 X 22	-0142	-9142	-0782	-9782	-0942	-9942
1 X 23	-0143	-9143	-0783	-9783	-0943	-9943
1 X 24	-0144	-9144	-0784	-9784	-0944	-9944
1 X 25	-0145	-9145	-0785	-9785	-0945	-9945
1 X 26	-0146	-9146	-0786	-9786	-0946	-9946
1 X 27	-0147	-9147	-0787	-9787	-0947	-9947
1 X 28	-0148	-9148	-0788	-9788	-0948	-9948
1 X 29	-0149	-9149	-0789	-9789	-0949	-9949
1 X 30	-0150	-9150	-0790	-9790	-0950	-9950
1 X 31	-0151	-9151	-0791	-9791	-0951	-9951
1 X 32	-0152	-9152	-0792	-9792	-0952	-9952
1 X 33	-0153	-9153	-0793	-9793	-0953	-9953
1 X 34	-0154	-9154	-0794	-9794	-0954	-9954
1 X 35	-0155	-9155	-0795	-9795	-0955	-9955
1 X 36	-0156	-9156	-0796	-9796	-0956	-9956
1 X 37	-0157	-9157	-0797	-9797	-0957	-9957
1 X 38	-0158	-9158	-0798	-9798	-0958	-9958
1 X 39	-0159	-9159	-0799	-9799	-0959	-9959
1 X 40	90120-0160	90120-9160	90120-0800	90120-9800	90120-0960	90120-9960

DIM C $^{(\pm 0.20)}_{\pm .008}$ (6.75) .266

DIM D $^{(\pm 0.20\ -0.30)}_{+.008\ -.012}$ (2.90) .114

NOTES:
FOR PLATING VARIATIONS SEE ENG.STD. SDES-99000-0003.

STANDARD PRODUCTS

REV GD&T FOR DIM B
EC NO: S2010-0493 2009/12/11
DRWN:SKANG 2009/12/21
CH'KD:ATSEE
APPR:MLONG 2009/12/21
DESCRIPTION
REV
N1

QUALITY SYMBOLS
FA=0
FC=0
FP=0

GENERAL TOLERANCES (UNLESS SPECIFIED)

	mm	INCH
4 PLACES	± ---	± ---
3 PLACES	± ---	± ---
2 PLACES	± ---	± ---
1 PLACE	± ---	± ---
ANGULAR ±---°		

DRAFT WHERE APPLICABLE MUST REMAIN WITHIN DIMENSIONS

DIMENSION STYLE: MM/IN
SCALE: NTS
DESIGN UNITS: METRIC
THIRD ANGLE PROJECTION

DRAWN BY: JDENNEHY DATE: 2006/01/18
CHECKED BY: DWASZKIEWICZ DATE: 2006/01/18
APPROVED BY: MLONG DATE: 2009/12/21

TITLE: C-GRID III SINGLE ROW STRAIGHT PIN HEADER

MOLEX INCORPORATED

MATERIAL NO.: SEE TABLE
DOCUMENT NO.: SDA-90120
SHEET NO.: 2 OF 6
SIZE: A3

THIS DRAWING CONTAINS INFORMATION THAT IS PROPRIETARY TO MOLEX INCORPORATED AND SHOULD NOT BE USED WITHOUT WRITTEN PERMISSION

CIRCUIT SIZE	PLATING TYPE A PART NO.	PLATING TYPE E PART NO.	PLATING TYPE F PART NO.
1 X 1	90120-0041	90120-0681	90120-0841
1 X 2	-0042	-0682	-0842
1 X 3	-0043	-0683	-0843
1 X 4	-0044	-0684	-0844
1 X 5	-0045	-0685	-0845
1 X 6	-0046	-0686	-0846
1 X 7	-0047	-0687	-0847
1 X 8	-0048	-0688	-0848
1 X 9	-0049	-0689	-0849
1 X 10	-0050	-0690	-0850
1 X 11	-0051	-0691	-0851
1 X 12	-0052	-0692	-0852
1 X 13	-0053	-0693	-0853
1 X 14	-0054	-0694	-0854
1 X 15	-0055	-0695	-0855
1 X 16	-0056	-0696	-0856
1 X 17	-0057	-0697	-0857
1 X 18	-0058	-0698	-0858
1 X 19	-0059	-0699	-0859
1 X 20	-0060	-0700	-0860
1 X 21	-0061	-0701	-0861
1 X 22	-0062	-0702	-0862
1 X 23	-0063	-0703	-0863
1 X 24	-0064	-0704	-0864
1 X 25	-0065	-0705	-0865
1 X 26	-0066	-0706	-0866
1 X 27	-0067	-0707	-0867
1 X 28	-0068	-0708	-0868
1 X 29	-0069	-0709	-0869
1 X 30	-0070	-0710	-0870
1 X 31	-0071	-0711	-0871
1 X 32	-0072	-0712	-0872
1 X 33	-0073	-0713	-0873
1 X 34	-0074	-0714	-0874
1 X 35	-0075	-0715	-0875
1 X 36	-0076	-0716	-0876
1 X 37	-0077	-0717	-0877
1 X 38	-0078	-0718	-0878
1 X 39	-0079	-0719	-0879
1 X 40	90120-0080	90120-0720	90120-0880

DIM C $^{(\pm 0.20)}_{\pm .008}$ (5.75) .226

DIM D $^{(\pm 0.20)}_{-0.30}$ $^{+.008}_{-.012}$ (2.90) .114

CIRCUIT SIZE	PLATING TYPE A PART NO.	PLATING TYPE E PART NO.	PLATING TYPE F PART NO.
1 X 1	90120-0081	90120-0721	90120-0881
1 X 2	-0082	-0722	-0882
1 X 3	-0083	-0723	-0883
1 X 4	-0084	-0724	-0884
1 X 5	-0085	-0725	-0885
1 X 6	-0086	-0726	-0886
1 X 7	-0087	-0727	-0887
1 X 8	-0088	-0728	-0888
1 X 9	-0089	-0729	-0889
1 X 10	-0090	-0730	-0890
1 X 11	-0091	-0731	-0891
1 X 12	-0092	-0732	-0892
1 X 13	-0093	-0733	-0893
1 X 14	-0094	-0734	-0894
1 X 15	-0095	-0735	-0895
1 X 16	-0096	-0736	-0896
1 X 17	-0097	-0737	-0897
1 X 18	-0098	-0738	-0898
1 X 19	-0099	-0739	-0899
1 X 20	-0100	-0740	-0900
1 X 21	-0101	-0741	-0901
1 X 22	-0102	-0742	-0902
1 X 23	-0103	-0743	-0903
1 X 24	-0104	-0744	-0904
1 X 25	-0105	-0745	-0905
1 X 26	-0106	-0746	-0906
1 X 27	-0107	-0747	-0907
1 X 28	-0108	-0748	-0908
1 X 29	-0109	-0749	-0909
1 X 30	-0110	-0750	-0910
1 X 31	-0111	-0751	-0911
1 X 32	-0112	-0752	-0912
1 X 33	-0113	-0753	-0913
1 X 34	-0114	-0754	-0914
1 X 35	-0115	-0755	-0915
1 X 36	-0116	-0756	-0916
1 X 37	-0117	-0757	-0917
1 X 38	-0118	-0758	-0918
1 X 39	-0119	-0759	-0919
1 X 40	90120-0120	90120-0760	90120-0920

DIM C $^{(\pm 0.20)}_{\pm .008}$ (5.75) .226

DIM D $^{(\pm 0.25)}_{\pm .010}$ (4.50) .177

NOTES:
FOR PLATING VARIATIONS SEE ENG.STD. SDES-99000-0003.

NON-STANDARD PRODUCTS

REV GD&T FOR DIM B
EC NO: S2010-0493 2009/12/11
DRWN:SKANG 2009/12/21
CH'KD:ATSEE 2009/12/21
APPR:MLONG 2009/12/21
DESCRIPTION
REV
N1

QUALITY SYMBOLS
FA=0
FC=0
FP=0

GENERAL TOLERANCES (UNLESS SPECIFIED)

	mm	INCH
4 PLACES	± ---	± ---
3 PLACES	± ---	± ---
2 PLACES	± ---	± ---
1 PLACE	± ---	± ---
ANGULAR ±---°		

DRAFT WHERE APPLICABLE MUST REMAIN WITHIN DIMENSIONS

DIMENSION STYLE: MM/IN
SCALE: NTS
DESIGN UNITS: METRIC
THIRD ANGLE PROJECTION

DRAWN BY: JDENNEHY DATE: 2006/01/18
CHECKED BY: DWASZKIEWICZ DATE: 2006/01/18
APPROVED BY: MLONG DATE: 2009/12/21

TITLE: C-GRID III SINGLE ROW STRAIGHT PIN HEADER

MOLEX INCORPORATED

MATERIAL NO.: SEE TABLE
DOCUMENT NO.: SDA-90120
SHEET NO.: 3 OF 6
SIZE: A3

THIS DRAWING CONTAINS INFORMATION THAT IS PROPRIETARY TO MOLEX INCORPORATED AND SHOULD NOT BE USED WITHOUT WRITTEN PERMISSION

CIRCUIT SIZE	PLATING TYPE A PART NO.	PLATING TYPE E PART NO.	PLATING TYPE F PART NO.
1 X 1	90120-0161	90120-0801	90120-0961
1 X 2	-0162	-0802	-0962
1 X 3	-0163	-0803	-0963
1 X 4	-0164	-0804	-0964
1 X 5	-0165	-0805	-0965
1 X 6	-0166	-0806	-0966
1 X 7	-0167	-0807	-0967
1 X 8	-0168	-0808	-0968
1 X 9	-0169	-0809	-0969
1 X 10	-0170	-0810	-0970
1 X 11	-0171	-0811	-0971
1 X 12	-0172	-0812	-0972
1 X 13	-0173	-0813	-0973
1 X 14	-0174	-0814	-0974
1 X 15	-0175	-0815	-0975
1 X 16	-0176	-0816	-0976
1 X 17	-0177	-0817	-0977
1 X 18	-0178	-0818	-0978
1 X 19	-0179	-0819	-0979
1 X 20	-0180	-0820	-0980
1 X 21	-0181	-0821	-0981
1 X 22	-0182	-0822	-0982
1 X 23	-0183	-0823	-0983
1 X 24	-0184	-0824	-0984
1 X 25	-0185	-0825	-0985
1 X 26	-0186	-0826	-0986
1 X 27	-0187	-0827	-0987
1 X 28	-0188	-0828	-0988
1 X 29	-0189	-0829	-0989
1 X 30	-0190	-0830	-0990
1 X 31	-0191	-0831	-0991
1 X 32	-0192	-0832	-0992
1 X 33	-0193	-0833	-0993
1 X 34	-0194	-0834	-0994
1 X 35	-0195	-0835	-0995
1 X 36	-0196	-0836	-0996
1 X 37	-0197	-0837	-0997
1 X 38	-0198	-0838	-0998
1 X 39	-0199	-0839	-0999
1 X 40	90120-0200	90120-0840	90120-1000

DIM C (±0.20) ±.008 (6.75) .266

DIM D (±0.25) ±.010 (4.50) .177

NOTES:
FOR PLATING VARIATIONS SEE ENG.STD. SDES-99000-0003.

NON-STANDARD PRODUCTS

REV GD&T FOR DIM B
EC NO: S2010-0493 2009/12/11
DRWN:SKANG 2009/12/21
CH'KD:ATSEE 2009/12/21
APPR:MLONG
DESCRIPTION
REV
N1

QUALITY SYMBOLS
FA=0
FC=0
FP=0

GENERAL TOLERANCES (UNLESS SPECIFIED)

	mm	INCH
4 PLACES	± ---	± ---
3 PLACES	± ---	± ---
2 PLACES	± ---	± ---
1 PLACE	± ---	± ---
ANGULAR ±---°		

DRAFT WHERE APPLICABLE MUST REMAIN WITHIN DIMENSIONS

DIMENSION STYLE: MM/IN
SCALE: NTS
DESIGN UNITS: METRIC
THIRD ANGLE PROJECTION

DRAWN BY: JDENNEHY DATE: 2006/01/18
CHECKED BY: DWASZKIEWICZ DATE: 2006/01/18
APPROVED BY: MLONG DATE: 2009/12/21

TITLE: C-GRID III SINGLE ROW STRAIGHT PIN HEADER

molex MOLEX INCORPORATED

MATERIAL NO.: SEE TABLE
DOCUMENT NO.: SDA-90120
SHEET NO.: 4 OF 6
SIZE: A3

THIS DRAWING CONTAINS INFORMATION THAT IS PROPRIETARY TO MOLEX INCORPORATED AND SHOULD NOT BE USED WITHOUT WRITTEN PERMISSION

CIRCUIT SIZE	PLATING TYPE B PART NO.	PLATING TYPE C PART NO.	PLATING TYPE D PART NO.	PLATING TYPE G PART NO.
1 X 1	90120-0281	90120-0441	90120-0601	90120-1081
1 X 2	-0282	-0442	-0602	-1082
1 X 3	-0283	-0443	-0603	-1083
1 X 4	-0284	-0444	-0604	-1084
1 X 5	-0285	-0445	-0605	-1085
1 X 6	-0286	-0446	-0606	-1086
1 X 7	-0287	-0447	-0607	-1087
1 X 8	-0288	-0448	-0608	-1088
1 X 9	-0289	-0449	-0609	-1089
1 X 10	-0290	-0450	-0610	-1090
1 X 11	-0291	-0451	-0611	-1091
1 X 12	-0292	-0452	-0612	-1092
1 X 13	-0293	-0453	-0613	-1093
1 X 14	-0294	-0454	-0614	-1094
1 X 15	-0295	-0455	-0615	-1095
1 X 16	-0296	-0456	-0616	-1096
1 X 17	-0297	-0457	-0617	-1097
1 X 18	-0298	-0458	-0618	-1098
1 X 19	-0299	-0459	-0619	-1099
1 X 20	-0300	-0460	-0620	-1100
1 X 21	-0301	-0461	-0621	-1101
1 X 22	-0302	-0462	-0622	-1102
1 X 23	-0303	-0463	-0623	-1103
1 X 24	-0304	-0464	-0624	-1104
1 X 25	-0305	-0465	-0625	-1105
1 X 26	-0306	-0466	-0626	-1106
1 X 27	-0307	-0467	-0627	-1107
1 X 28	-0308	-0468	-0628	-1108
1 X 29	-0309	-0469	-0629	-1109
1 X 30	-0310	-0470	-0630	-1110
1 X 31	-0311	-0471	-0631	-1111
1 X 32	-0312	-0472	-0632	-1112
1 X 33	-0313	-0473	-0633	-1113
1 X 34	-0314	-0474	-0634	-1114
1 X 35	-0315	-0475	-0635	-1115
1 X 36	-0316	-0476	-0636	-1116
1 X 37	-0317	-0477	-0637	-1117
1 X 38	-0318	-0478	-0638	-1118
1 X 39	-0319	-0479	-0639	-1119
1 X 40	90120-0320	90120-0480	90120-0640	90120-1120

DIM C $(\pm 0.20) \pm .008$ (6.75) .266

DIM D $(\pm 0.20 / -0.30) \pm .008 / -.012$ (2.90) .114

CIRCUIT SIZE	PLATING TYPE G PART NO.	PLATING TYPE B PART NO.	PLATING TYPE C PART NO.	PLATING TYPE D PART NO.
1 X 1	90120-1001	90120-0201	90120-0361	90120-0521
1 X 2	-1002	-0202	-0362	-0522
1 X 3	-1003	-0203	-0363	-0523
1 X 4	-1004	-0204	-0364	-0524
1 X 5	-1005	-0205	-0365	-0525
1 X 6	-1006	-0206	-0366	-0526
1 X 7	-1007	-0207	-0367	-0527
1 X 8	-1008	-0208	-0368	-0528
1 X 9	-1009	-0209	-0369	-0529
1 X 10	-1010	-0210	-0370	-0530
1 X 11	-1011	-0211	-0371	-0531
1 X 12	-1012	-0212	-0372	-0532
1 X 13	-1013	-0213	-0373	-0533
1 X 14	-1014	-0214	-0374	-0534
1 X 15	-1015	-0215	-0375	-0535
1 X 16	-1016	-0216	-0376	-0536
1 X 17	-1017	-0217	-0377	-0537
1 X 18	-1018	-0218	-0378	-0538
1 X 19	-1019	-0219	-0379	-0539
1 X 20	-1020	-0220	-0380	-0540
1 X 21	-1021	-0221	-0381	-0541
1 X 22	-1022	-0222	-0382	-0542
1 X 23	-1023	-0223	-0383	-0543
1 X 24	-1024	-0224	-0384	-0544
1 X 25	-1025	-0225	-0385	-0545
1 X 26	-1026	-0226	-0386	-0546
1 X 27	-1027	-0227	-0387	-0547
1 X 28	-1028	-0228	-0388	-0548
1 X 29	-1029	-0229	-0389	-0549
1 X 30	-1030	-0230	-0390	-0550
1 X 31	-1031	-0231	-0391	-0551
1 X 32	-1032	-0232	-0392	-0552
1 X 33	-1033	-0233	-0393	-0553
1 X 34	-1034	-0234	-0394	-0554
1 X 35	-1035	-0235	-0395	-0555
1 X 36	-1036	-0236	-0396	-0556
1 X 37	-1037	-0237	-0397	-0557
1 X 38	-1038	-0238	-0398	-0558
1 X 39	-1039	-0239	-0399	-0559
1 X 40	90120-1040	90120-0240	90120-0400	90120-0560

DIM C $(\pm 0.20) \pm .008$ (5.75) .226

DIM D $(\pm 0.20 / -0.30) \pm .008 / -.012$ (2.90) .114

NOTES:
FOR PLATING VARIATIONS SEE ENG.STD. SDES-99000-0003.

NON-STANDARD PRODUCTS
NOT FOR GENERAL RELEASE

REV GD&T FOR DIM B
EC NO: S2010-0493 2009/12/11
DRWN:SKANG 2009/12/21
CH'KD:ATSEE 2009/12/21
APPR:MLONG 2009/12/21
DESCRIPTION
REV
N1

QUALITY SYMBOLS
FA=0
FC=0
FB=0

GENERAL TOLERANCES (UNLESS SPECIFIED)

	mm	INCH
4 PLACES	± ---	± ---
3 PLACES	± ---	± ---
2 PLACES	± ---	± ---
1 PLACE	± ---	± ---
ANGULAR ±---°		

DRAFT WHERE APPLICABLE MUST REMAIN WITHIN DIMENSIONS

DIMENSION STYLE: MM/IN
SCALE: NTS
DESIGN UNITS: METRIC
THIRD ANGLE PROJECTION

DRAWN BY: JDENNEHY DATE: 2006/01/18
CHECKED BY: DWASZKIEWICZ DATE: 2006/01/18
APPROVED BY: MLONG DATE: 2009/12/21

TITLE
C-GRID III
SINGLE ROW STRAIGHT
PIN HEADER

MOLEX INCORPORATED

MATERIAL NO.: SEE TABLE
DOCUMENT NO.: SDA-90120
SHEET NO.: 5 OF 6
SIZE: A3

THIS DRAWING CONTAINS INFORMATION THAT IS PROPRIETARY TO MOLEX INCORPORATED AND SHOULD NOT BE USED WITHOUT WRITTEN PERMISSION

CIRCUIT SIZE	PLATING TYPE B PART NO.	PLATING TYPE C PART NO.	PLATING TYPE D PART NO.	PLATING TYPE G PART NO.
1 X 1	90120-0241	90120-0401	90120-0561	90120-1041
1 X 2	-0242	-0402	-0562	-1042
1 X 3	-0243	-0403	-0563	-1043
1 X 4	-0244	-0404	-0564	-1044
1 X 5	-0245	-0405	-0565	-1045
1 X 6	-0246	-0406	-0566	-1046
1 X 7	-0247	-0407	-0567	-1047
1 X 8	-0248	-0408	-0568	-1048
1 X 9	-0249	-0409	-0569	-1049
1 X 10	-0250	-0410	-0570	-1050
1 X 11	-0251	-0411	-0571	-1051
1 X 12	-0252	-0412	-0572	-1052
1 X 13	-0253	-0413	-0573	-1053
1 X 14	-0254	-0414	-0574	-1054
1 X 15	-0255	-0415	-0575	-1055
1 X 16	-0256	-0416	-0576	-1056
1 X 17	-0257	-0417	-0577	-1057
1 X 18	-0258	-0418	-0578	-1058
1 X 19	-0259	-0419	-0579	-1059
1 X 20	-0260	-0420	-0580	-1060
1 X 21	-0261	-0421	-0581	-1061
1 X 22	-0262	-0422	-0582	-1062
1 X 23	-0263	-0423	-0583	-1063
1 X 24	-0264	-0424	-0584	-1064
1 X 25	-0265	-0425	-0585	-1065
1 X 26	-0266	-0426	-0586	-1066
1 X 27	-0267	-0427	-0587	-1067
1 X 28	-0268	-0428	-0588	-1068
1 X 29	-0269	-0429	-0589	-1069
1 X 30	-0270	-0430	-0590	-1070
1 X 31	-0271	-0431	-0591	-1071
1 X 32	-0272	-0432	-0592	-1072
1 X 33	-0273	-0433	-0593	-1073
1 X 34	-0274	-0434	-0594	-1074
1 X 35	-0275	-0435	-0595	-1075
1 X 36	-0276	-0436	-0596	-1076
1 X 37	-0277	-0437	-0597	-1077
1 X 38	-0278	-0438	-0598	-1078
1 X 39	-0279	-0439	-0599	-1079
1 X 40	90120-0280	90120-0440	90120-0600	90120-1080

DIM C (±0.20) ±.008 (5.75) .226

DIM D (±0.25) ±.010 (4.50) .177

CIRCUIT SIZE	PLATING TYPE B PART NO.	PLATING TYPE C PART NO.	PLATING TYPE D PART NO.	PLATING TYPE G PART NO.
1 X 1	90120-0321	90120-0481	90120-0641	90120-1121
1 X 2	-0322	-0482	-0642	-1122
1 X 3	-0323	-0483	-0643	-1123
1 X 4	-0324	-0484	-0644	-1124
1 X 5	-0325	-0485	-0645	-1125
1 X 6	-0326	-0486	-0646	-1126
1 X 7	-0327	-0487	-0647	-1127
1 X 8	-0328	-0488	-0648	-1128
1 X 9	-0329	-0489	-0649	-1129
1 X 10	-0330	-0490	-0650	-1130
1 X 11	-0331	-0491	-0651	-1131
1 X 12	-0332	-0492	-0652	-1132
1 X 13	-0333	-0493	-0653	-1133
1 X 14	-0334	-0494	-0654	-1134
1 X 15	-0335	-0495	-0655	-1135
1 X 16	-0336	-0496	-0656	-1136
1 X 17	-0337	-0497	-0657	-1137
1 X 18	-0338	-0498	-0658	-1138
1 X 19	-0339	-0499	-0659	-1139
1 X 20	-0340	-0500	-0660	-1140
1 X 21	-0341	-0501	-0661	-1141
1 X 22	-0342	-0502	-0662	-1142
1 X 23	-0343	-0503	-0663	-1143
1 X 24	-0344	-0504	-0664	-1144
1 X 25	-0345	-0505	-0665	-1145
1 X 26	-0346	-0506	-0666	-1146
1 X 27	-0347	-0507	-0667	-1147
1 X 28	-0348	-0508	-0668	-1148
1 X 29	-0349	-0509	-0669	-1149
1 X 30	-0350	-0510	-0670	-1150
1 X 31	-0351	-0511	-0671	-1151
1 X 32	-0352	-0512	-0672	-1152
1 X 33	-0353	-0513	-0673	-1153
1 X 34	-0354	-0514	-0674	-1154
1 X 35	-0355	-0515	-0675	-1155
1 X 36	-0356	-0516	-0676	-1156
1 X 37	-0357	-0517	-0677	-1157
1 X 38	-0358	-0518	-0678	-1158
1 X 39	-0359	-0519	-0679	-1159
1 X 40	90120-0360	90120-0520	90120-0680	90120-1160

DIM C (±0.20) ±.008 (6.75) .266

DIM D (±0.25) ±.010 (4.50) .177

NOTES:
FOR PLATING VARIATIONS SEE ENG.STD. SDES-99000-0003.

NON-STANDARD PRODUCTS
NOT FOR GENERAL RELEASE

REV GD&T FOR DIM B
EC NO: S2010-0493 2009/12/11
DRWN:SKANG 2009/12/21
CH'KD:ATSEE
APPR:MLONG 2009/12/21
DESCRIPTION
REV
N1

QUALITY SYMBOLS
FA=0
FC=0
FP=0

GENERAL TOLERANCES (UNLESS SPECIFIED)

	mm	INCH
4 PLACES	± ---	± ---
3 PLACES	± ---	± ---
2 PLACES	± ---	± ---
1 PLACE	± ---	± ---
ANGULAR ±---°		

DRAFT WHERE APPLICABLE MUST REMAIN WITHIN DIMENSIONS

DIMENSION STYLE: MM/IN
SCALE: NTS
DESIGN UNITS: METRIC
THIRD ANGLE PROJECTION

DRAWN BY: JDENNEHY DATE: 2006/01/18
CHECKED BY: DWASZKIEWICZ DATE: 2006/01/18
APPROVED BY: MLONG DATE: 2009/12/21

TITLE: C-GRID III SINGLE ROW STRAIGHT PIN HEADER

MOLEX INCORPORATED

MATERIAL NO.: SEE TABLE
DOCUMENT NO.: SDA-90120
SHEET NO.: 6 OF 6
SIZE: A3

THIS DRAWING CONTAINS INFORMATION THAT IS PROPRIETARY TO MOLEX INCORPORATED AND SHOULD NOT BE USED WITHOUT WRITTEN PERMISSION

CIRCUIT SIZE	PLATING TYPE A		PLATING TYPE E		PLATING TYPE F	
	PART NO.	CUSTOMER SPECIFIC PART NO.	PART NO.	CUSTOMER SPECIFIC PART NO.	PART NO.	CUSTOMER SPECIFIC PART NO.
1 X 1	90120-0121	90120-9121	90120-0761	90120-9761	90120-0921	90120-9921
1 X 2	-0122	-9122	-0762	-9762	-0922	-9922
1 X 3	-0123	-9123	-0763	-9763	-0923	-9923
1 X 4	-0124	-9124	-0764	-9764	-0924	-9924
1 X 5	-0125	-9125	-0765	-9765	-0925	-9925
1 X 6	-0126	-9126	-0766	-9766	-0926	-9926
1 X 7	-0127	-9127	-0767	-9767	-0927	-9927
1 X 8	-0128	-9128	-0768	-9768	-0928	-9928
1 X 9	-0129	-9129	-0769	-9769	-0929	-9929
1 X 10	-0130	-9130	-0770	-9770	-0930	-9930
1 X 11	-0131	-9131	-0771	-9771	-0931	-9931
1 X 12	-0132	-9132	-0772	-9772	-0932	-9932
1 X 13	-0133	-9133	-0773	-9773	-0933	-9933
1 X 14	-0134	-9134	-0774	-9774	-0934	-9934
1 X 15	-0135	-9135	-0775	-9775	-0935	-9935
1 X 16	-0136	-9136	-0776	-9776	-0936	-9936
1 X 17	-0137	-9137	-0777	-9777	-0937	-9937
1 X 18	-0138	-9138	-0778	-9778	-0938	-9938
1 X 19	-0139	-9139	-0779	-9779	-0939	-9939
1 X 20	-0140	-9140	-0780	-9780	-0940	-9940
1 X 21	-0141	-9141	-0781	-9781	-0941	-9941
1 X 22	-0142	-9142	-0782	-9782	-0942	-9942
1 X 23	-0143	-9143	-0783	-9783	-0943	-9943
1 X 24	-0144	-9144	-0784	-9784	-0944	-9944
1 X 25	-0145	-9145	-0785	-9785	-0945	-9945
1 X 26	-0146	-9146	-0786	-9786	-0946	-9946
1 X 27	-0147	-9147	-0787	-9787	-0947	-9947
1 X 28	-0148	-9148	-0788	-9788	-0948	-9948
1 X 29	-0149	-9149	-0789	-9789	-0949	-9949
1 X 30	-0150	-9150	-0790	-9790	-0950	-9950
1 X 31	-0151	-9151	-0791	-9791	-0951	-9951
1 X 32	-0152	-9152	-0792	-9792	-0952	-9952
1 X 33	-0153	-9153	-0793	-9793	-0953	-9953
1 X 34	-0154	-9154	-0794	-9794	-0954	-9954
1 X 35	-0155	-9155	-0795	-9795	-0955	-9955
1 X 36	-0156	-9156	-0796	-9796	-0956	-9956
1 X 37	-0157	-9157	-0797	-9797	-0957	-9957
1 X 38	-0158	-9158	-0798	-9798	-0958	-9958
1 X 39	-0159	-9159	-0799	-9799	-0959	-9959
1 X 40	90120-0160	90120-9160	90120-0800	90120-9800	90120-0960	90120-9960

DIM C (± 0.20) $\pm .008$ (6.75) .266

DIM D $(\pm 0.20 / -0.30)$ $+.008 / -.012$ (2.90) .114

NOTES:
FOR PLATING VARIATIONS SEE ENG.STD. SDES-99000-0003.

STANDARD PRODUCTS

PART NO'S ADDED
EC NO: E2006-0667 2006/01/23
DRWN: JDENNEHY 2006/01/23
CHKD: DWASZKIEWICZ 2006/01/23
APPR: JDENNEHY 2006/02/07
REV K DESCRIPTION

QUALITY SYMBOLS
▼=0
▽=0

GENERAL TOLERANCES (UNLESS SPECIFIED)

	mm	INCH
4 PLACES	± ---	± ---
3 PLACES	± ---	± ---
2 PLACES	± ---	± ---
1 PLACE	± ---	± ---
ANGULAR ±---°		

DRAFT WHERE APPLICABLE MUST REMAIN WITHIN DIMENSIONS

DIMENSION STYLE: MM ONLY
SCALE: ---
DESIGN UNITS: METRIC
THIRD ANGLE PROJECTION

DRAWN BY: JDENNEHY DATE: 2006/01/18
CHECKED BY: DWASZKIEWICZ DATE: 2006/01/18
APPROVED BY: JDENNEHY DATE: 2006/01/18
MATERIAL NO.: SEE CHART

TITLE: C-GRID III SINGLE ROW STRAIGHT PIN HEADER

MOLEX INCORPORATED

DOCUMENT NO.: SDA-90120
SHEET NO.: 2 OF 6

SIZE A3

THIS DRAWING CONTAINS INFORMATION THAT IS PROPRIETARY TO MOLEX INCORPORATED AND SHOULD NOT BE USED WITHOUT WRITTEN PERMISSION