This document was generated on 05/25/2010

PLEASE CHECK WWW.MOLEX.COM FOR LATEST PART INFORMATION

Part Number: 0877592450
Status: Active
Overview: milligrid
Description: 2.00mm (.079") Pitch Milli-Grid™ Header, Surface Mount, Vertical, 24 Circuits, 0.38µm (15µ") Gold (Au) Selective Plating, with Press-fit Plastic Pegs, Lead-free

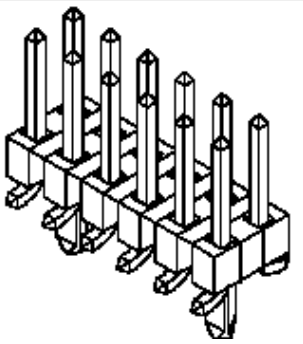

Series image - Reference only

Documents:

3D Model
Drawing (PDF)
Product Specification PS-87761-100 (PDF)
RoHS Certificate of Compliance (PDF)

Agency Certification

UL	E29179

General

Product Family	PCB Headers
Series	87759
Application	Board-to-Board
Overview	milligrid
Product Name	Milli-Grid™

Physical

Breakaway	Yes
Circuits (Loaded)	24
Circuits (maximum)	24
Color - Resin	Black
Durability (mating cycles max)	100
First Mate / Last Break	No
Flammability	94V-0
Glow-Wire Compliant	No
Guide to Mating Part	No
Keying to Mating Part	None
Lock to Mating Part	None
Mated Height (in)	0.150 In
Mated Height (mm)	3.80 mm
Material - Metal	Phosphor Bronze
Material - Plating Mating	Gold
Material - Plating Termination	Tin
Material - Resin	High Temperature Thermoplastic
Number of Rows	2
Orientation	Vertical
PCB Locator	Yes
PCB Retention	None
Packaging Type	Tube
Pitch - Mating Interface (in)	0.079 In
Pitch - Mating Interface (mm)	2.00 mm
Pitch - Term. Interface (in)	0.079 In
Pitch - Term. Interface (mm)	2.00 mm
Plating min: Mating (µin)	15
Plating min: Mating (µm)	0.38
Polarized to Mating Part	No
Polarized to PCB	No
Shrouded	No
Stackable	Yes
Temperature Range - Operating	-55°C to +105°C
Termination Interface: Style	Surface Mount

EU RoHS
ELV and RoHS Compliant
REACH SVHC
Contains SVHC: No
Halogen-Free Status
Not Reviewed

China RoHS

Need more information on product environmental compliance?

Email productcompliance@molex.com
For a multiple part number RoHS Certificate of Compliance, click here

Please visit the Contact Us section for any non-product compliance questions.

Search Parts in this Series
87759Series

Mates With
79107 Milli-Grid™ Receptacle, Vertical, Through Hole. 79108 Milli-Grid™ Flex-to-Board, Vertical Receptacle. Milli-Grid™ Receptacle, Surface Mount. 79109. 87381

Electrical

Current - Maximum per Contact	2A
Voltage - Maximum	125V

Solder Process Data

Duration at Max. Process Temperature (seconds)	10
Lead-free Process Capability	Reflow Capable (SMT only)
Max. Cycles at Max. Process Temperature	3
Process Temperature max. C	260

Material Info

Reference - Drawing Numbers

Packaging Specification	PK-89990-475
Product Specification	PS-87761-100
Sales Drawing	SD-87759-113

This document was generated on 05/25/2010

PLEASE CHECK WWW.MOLEX.COM FOR LATEST PART INFORMATION

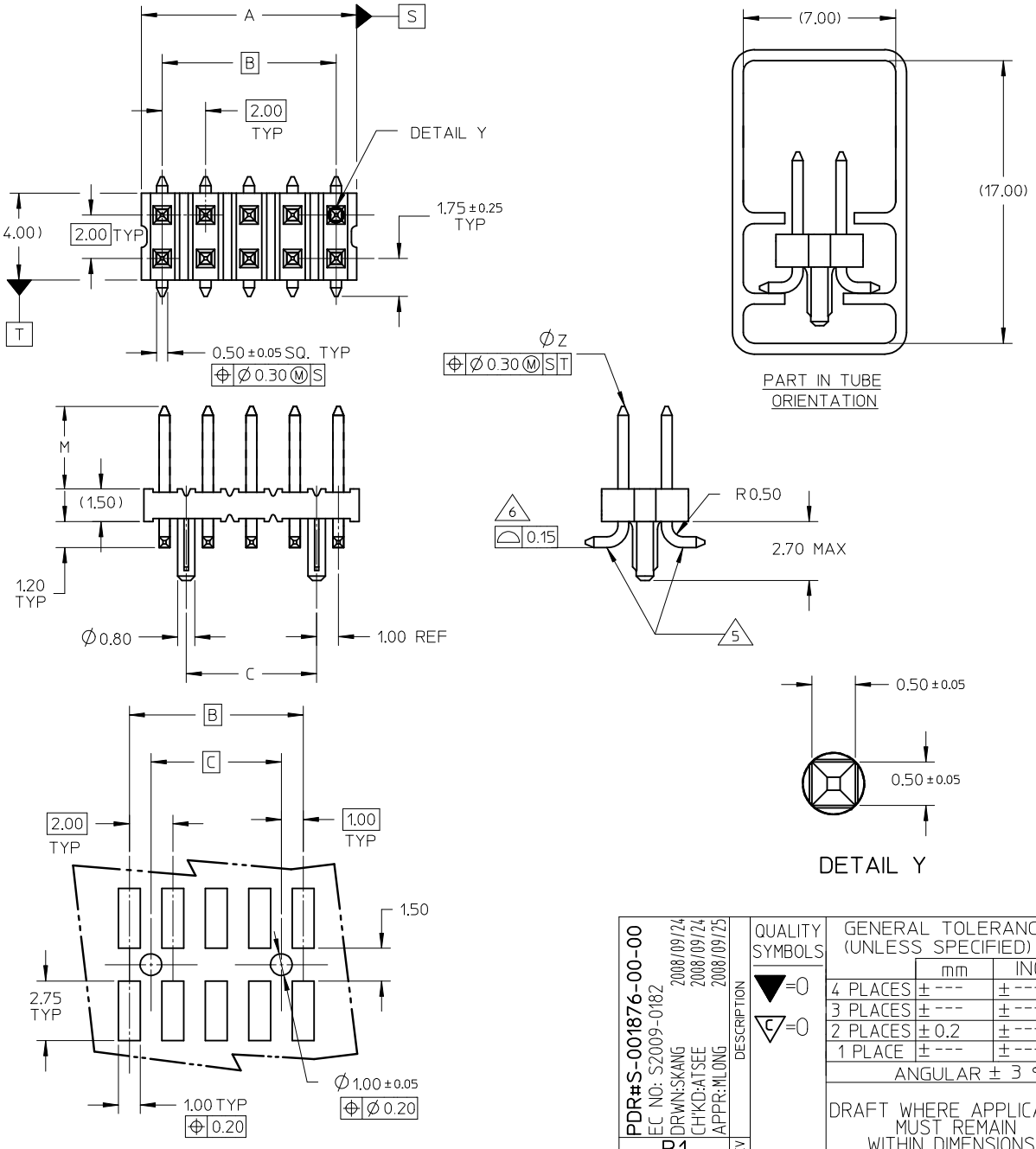

NOTE:

1. MATERIAL:
   HSG - HIGH TEMPERATURE THERMOPLASTIC, UL 94V-0, COLOUR BLACK
   PIN - 0.50 SQ PHOSPHOR BRONZE
2. PLATING:
   **50 / **52 - 0.38um MIN GOLD PLATE AT CONTACT AREA, TIN PLATE AT SOLDER AREA, BOTH OVER NICKEL UNDERPLATE
   **51 - 0.76um MIN GOLD PLATE AT CONTACT AREA, TIN PLATE AT SOLDER AREA, BOTH OVER NICKEL UNDERPLATE
   (** - REPRESENTS DIFFERENT CKT SIZE , SEE TABLE AT SHT 2)
3. PIN PUSHOUT FORCE: 1KG MIN IN EITHER DIRECTION
4. PRODUCT SPEC PS-87761-100 APPLIES.
5. BEND DEPRESSION IS ACCEPTABLE SO LONG AS IT DOES NOT AFFECT THE OVERALL COPLANARITY OF TAIL.
6. COPLANARITY IS TO BE MEASURED BY RESTING THE SOLDERTAIL ON A FLAT SURFACE.
7. FOR ILLUSTRATION PURPOSES, 10CKT IS SHOWN
8. TUBE LENGTH IS 560MM REF STANDARD.
9. RECOMMENDED PCB BOARD THK IS 1.60± 0.10 MM.

PDR#S-001876-00-00
EC NO: S2009-0182
DRWN:SKANG 2008/09/24
CH'KD:ATSEE 2008/09/24
APPR:MLONG 2008/09/25
DESCRIPTION
REV
B1

QUALITY SYMBOLS
▼=0
Ⓒ=0

GENERAL TOLERANCES (UNLESS SPECIFIED)

	mm	INCH
4 PLACES	± ---	± ---
3 PLACES	± ---	± ---
2 PLACES	± 0.2	± ---
1 PLACE	± ---	± ---
ANGULAR ± 3 °		

DRAFT WHERE APPLICABLE MUST REMAIN WITHIN DIMENSIONS

DIMENSION STYLE: MM ONLY
SCALE: NTS
DESIGN UNITS: METRIC
THIRD ANGLE PROJECTION

DRAWN BY: KSEE DATE: 2003/12/24
CHECKED BY: KCLING DATE: 2004/01/12
APPROVED BY: SKTOH DATE: 2004/01/12

TITLE: CUSTOM HEADER MGRID, 2MM DUAL ROW HDR WITH PEG, SMT

MOLEX INCORPORATED

MATERIAL NO.: SEE TABLE
DOCUMENT NO.: SD-87759-113
SHEET NO.: 1 OF 2

SIZE A3

THIS DRAWING CONTAINS INFORMATION THAT IS PROPRIETARY TO MOLEX INCORPORATED AND SHOULD NOT BE USED WITHOUT WRITTEN PERMISSION

PART NUMBER WITHOUT CAP IN TUBE	CKT SIZE	A	B	C	M
87759-0850/0851	08	7.90	6.00	4.00	3.80
87759-0852	08	7.90	6.00	4.00	9.60
87759-1050/1051	10	9.90	8.00	6.00	3.80
87759-1250/1251	12	11.90	10.00	8.00	3.80
87759-1450/1451	14	13.90	12.00	10.00	3.80
87759-1650/1651	16	15.90	14.00	12.00	3.80
87759-1850/1851	18	17.90	16.00	14.00	3.80
87759-2050/2051	20	19.90	18.00	16.00	3.80
87759-2250/2251	22	21.90	20.00	18.00	3.80
87759-2450/2451	24	23.90	22.00	20.00	3.80
87759-2650/2651	26	25.90	24.00	22.00	3.80
87759-2850/2851	28	27.90	26.00	24.00	3.80
87759-3050/3051	30	29.90	28.00	26.00	3.80
87759-3250/3251	32	31.90	30.00	28.00	3.80
87759-3450/3451	34	33.90	32.00	30.00	3.80
87759-3650/3651	36	35.90	34.00	32.00	3.80
87759-3850/3851	38	37.90	36.00	34.00	3.80
87759-4050/4051	40	39.90	38.00	36.00	3.80
87759-4250/4251	42	41.90	40.00	38.00	3.80
87759-4450/4451	44	43.90	42.00	40.00	3.80
87759-4650/4651	46	45.90	44.00	42.00	3.80
87759-4850/4851	48	47.90	46.00	44.00	3.80
87759-5050/5051	50	49.90	48.00	46.00	3.80

PDR#S-001876-00-00
EC NO: S2009-0182
DRWN:SKANG 2008/09/24
CH'KD:ATSEE 2008/09/24
APPR:MLONG 2008/09/25
DESCRIPTION
REV
B1

QUALITY SYMBOLS
▼=0
Ⓒ=0

GENERAL TOLERANCES (UNLESS SPECIFIED)

	mm	INCH
4 PLACES	± ---	± ---
3 PLACES	± ---	± ---
2 PLACES	± 0.2	± ---
1 PLACE	± ---	± ---
ANGULAR ± 3 °		

DRAFT WHERE APPLICABLE MUST REMAIN WITHIN DIMENSIONS

DIMENSION STYLE: MM ONLY
SCALE: NTS
DESIGN UNITS: METRIC
THIRD ANGLE PROJECTION

DRAWN BY: KSEE DATE: 2003/12/24
CHECKED BY: KCLING DATE: 2004/01/12
APPROVED BY: SKTOH DATE: 2004/01/12

TITLE: CUSTOM HEADER MGRID, 2MM DUAL ROW HDR WITH PEG, SMT

molex MOLEX INCORPORATED

MATERIAL NO.: SEE TABLE
DOCUMENT NO.: SD-87759-113
SHEET NO.: 2 OF 2
SIZE: A3

THIS DRAWING CONTAINS INFORMATION THAT IS PROPRIETARY TO MOLEX INCORPORATED AND SHOULD NOT BE USED WITHOUT WRITTEN PERMISSION