molex
one company > a world of innovation

This document was generated on 06/02/2010

PLEASE CHECK WWW.MOLEX.COM FOR LATEST PART INFORMATION

Part Number: 0876642000
Status: Active
Overview: extreme_powerplus_ssi
Description: 6.35mm (.250") and 7.62mm (.300") Pitch Power, 2.54mm (.100") Pitch Signal, EXTreme PowerPlus™ AC/DC Receptacle, Through Hole, Right Angle,32 Circuits, Power Beta 5, Signal 24, Power Alpha 3, Recessed Power Circuit Positions A2, A3, B1, B2, B3, B4, B5, Lea

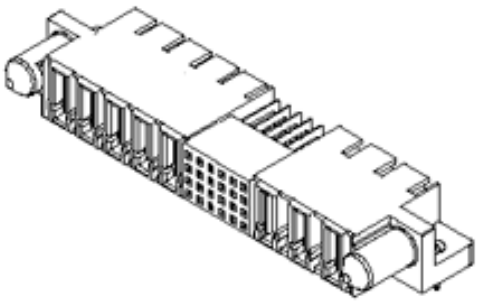

Series image - Reference only

Documents:

3D Model
Drawing (PDF)
Product Specification PS-87663-006 (PDF)
RoHS Certificate of Compliance (PDF)

Agency Certification

UL	E29179

General

Product Family	PCB Receptacles
Series	87664
Application	Board-to-Board
Comments	Recessed Power Circuit Position: A2, A3, B1, B2, B3, B4, B5
Overview	extreme_powerplus_ssi
Product Literature Order No	987650-3002
Product Name	EXTreme PowerPlus™

Physical

Circuits (Loaded)	32
Circuits Detail	Power Beta 5, Signal 24, Power Alpha 3
Color - Resin	Black
Flammability	94V-0
Glow-Wire Compliant	No
Guide to Mating Part	Yes
Lock to Mating Part	None
Material - Metal	Copper Alloy
Material - Plating Mating	Gold
Material - Plating Termination	Tin
Material - Resin	High Temperature Thermoplastic
Number of Rows	4
Orientation	Right Angle
PC Tail Length (in)	0.135 In
PC Tail Length (mm)	3.43 mm
PCB Locator	Yes
PCB Retention	Yes
PCB Thickness Recommended (in)	0.062 In
PCB Thickness Recommended (mm)	1.60 mm
Packaging Type	Tray
Pitch - Mating Interface (in)	0.100 In, 0.250 In, 0.300 In
Pitch - Mating Interface (mm)	2.54 mm, 6.35 mm, 7.62 mm
Plating min: Mating (µin)	30
Plating min: Mating (µm)	0.76
Plating min: Termination (µin)	100
Plating min: Termination (µm)	2.54
Polarized to Mating Part	Yes
Polarized to PCB	Yes
Stackable	No
Temperature Range - Operating	-20°C to +105°C

EU RoHS
ELV and RoHS Compliant
REACH SVHC
Not Reviewed
Halogen-Free Status
Not Reviewed

China RoHS

Need more information on product environmental compliance?

Email productcompliance@molex.com
For a multiple part number RoHS Certificate of Compliance, click here

Please visit the Contact Us section for any non-product compliance questions.

Search Parts in this Series
87664Series

Mates With
87663 PCB Header with Beveled Metal Pins

Termination Interface: Style	Through Hole

Electrical

Current - Maximum per Contact	2.5A, 30A, 50A
Voltage - Maximum	250V (RMS)

Solder Process Data

Duration at Max. Process Temperature (seconds)	10
Lead-free Process Capability	SMC & Wave Capable (TH only)
Max. Cycles at Max. Process Temperature	3
Process Temperature max. C	260

Material Info

Reference - Drawing Numbers

Application Specification	AS-87631-018
Product Specification	PS-87663-006
Sales Drawing	SD-87664-011

This document was generated on 06/02/2010

PLEASE CHECK WWW.MOLEX.COM FOR LATEST PART INFORMATION

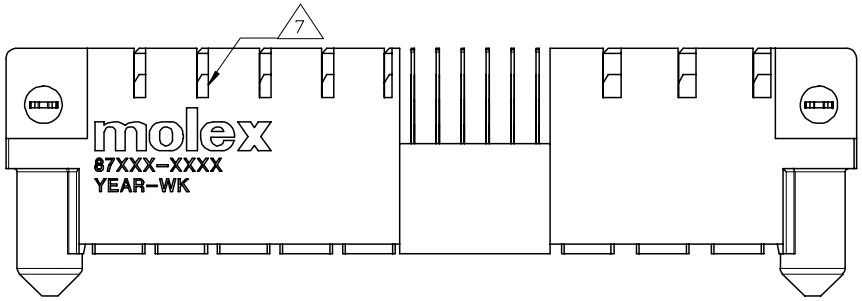

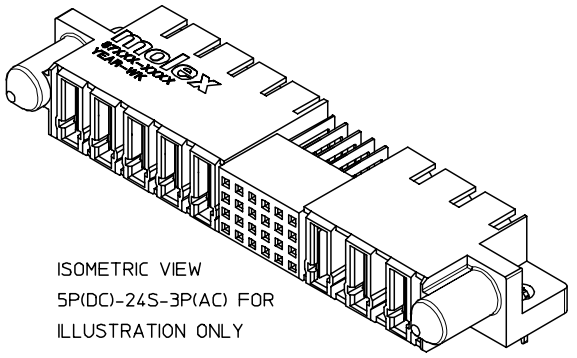

ISOMETRIC VIEW
5P(DC)-24S-3P(AC) FOR
ILLUSTRATION ONLY

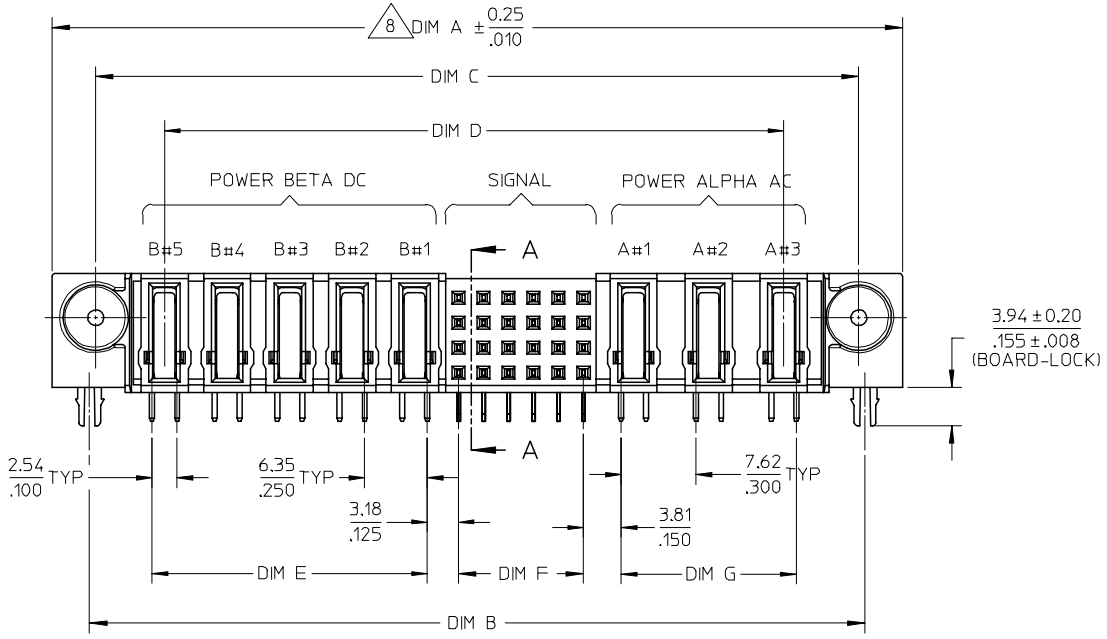

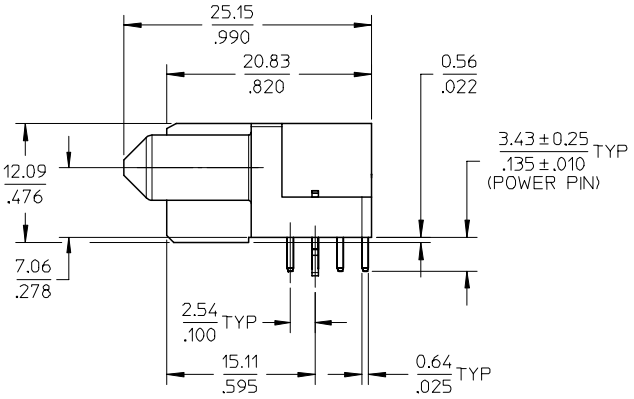

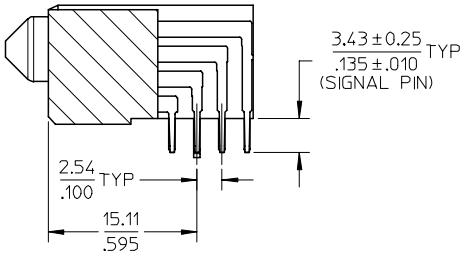

SECTION A-A

OBS TIN/LEAD P/N
EC NO: S2006-0767 2006/04/03
DRWN:MLONG 2006/04/03
CHKD:NAGESHKN 2006/04/06
APPR:PTLIM
DESCRIPTION
REV D

QUALITY SYMBOLS
▼=0
▽=0

GENERAL TOLERANCES (UNLESS SPECIFIED)

	mm	INCH
4 PLACES	± ---	± ---
3 PLACES	± ---	± .005
2 PLACES	± 0.13	± .010
1 PLACE	± 0.25	± ---
ANGULAR ± 3 °		

DRAFT WHERE APPLICABLE MUST REMAIN WITHIN DIMENSIONS

DIMENSION STYLE	MM/IN
SCALE	NTS
DESIGN UNITS	METRIC
	THIRD ANGLE PROJECTION
DRAWN BY	BHLOW
DATE	2002/11/20
CHECKED BY	PTLIM
DATE	2002/11/26
APPROVED BY	SKTOH
DATE	2002/11/27
MATERIAL NO.	SEE TABLE
TITLE	AC/DC POWER RECEPTACLE P(A)AC-S-P(B)DC CONFIG. R/A, T/H, BOARD-LOCK
	MOLEX INCORPORATED
DOCUMENT NO.	SD-87664-011
SHEET NO.	1 OF 3
SIZE	A3

THIS DRAWING CONTAINS INFORMATION THAT IS PROPRIETARY TO MOLEX INCORPORATED AND SHOULD NOT BE USED WITHOUT WRITTEN PERMISSION

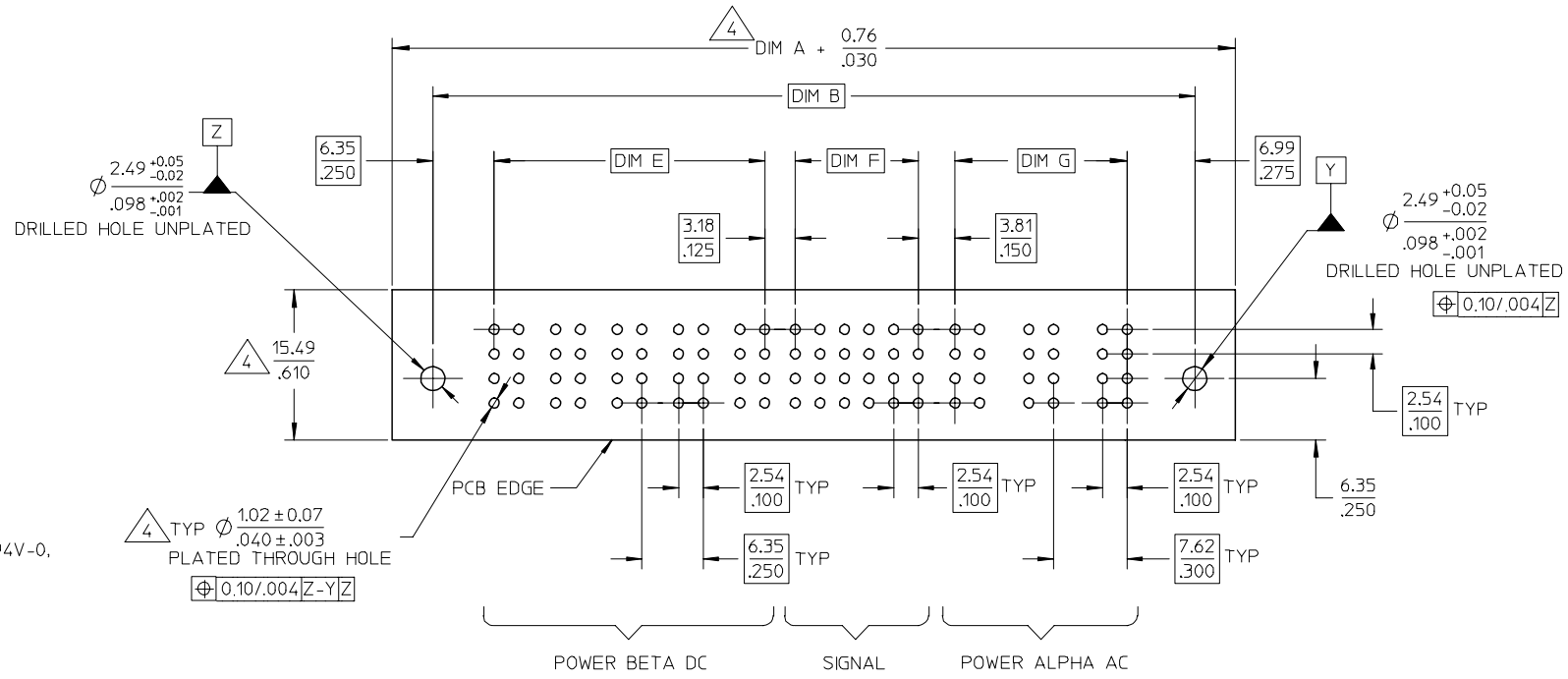

RECOMMENDED PCB LAYOUT

NOTES:

1. MATERIALS:-
   HOUSING - LCP, GLASS FILLED, UL94V-0,
   COLOUR: BLACK.
   SIGNAL TERMINAL - COPPER ALLOY
   POWER TERMINAL - COPPER ALLOY
2. FINISH :-
   SIGNAL & POWER CONTACTS
   0.76 MICROMETER MINIMUM GOLD (Au) AT CONTACT AREA AND
   2.54 MICROMETER MINIMUM TIN AT SOLDERTAIL AREA
   OVER 1.27 MICROMETER MINIMUM NICKEL (Ni) UNDERPLATE.
3. PRODUCT SPECIFICATION : PS-87663-006.
4. COMPONENT STAY AWAY FROM CONNECTOR.
5. PCB NOTE FOR DIAMETER 1.02/.040 PLATED HOLE.
   - DRILLED HOLE SIZE IS 1.15/ .0453.
   - PLATE WITH 0.007 / .0003 MINIMUM TIN OVER 0.03/.001
   TO 0.08/.003 COPPER PLATING TO ACHIEVE 1.02±0.07/.040±.003 HOLE.
6. ALL TERMINAL TIPS ARE DESIGNED WITH EXPOSE BASE COPPER.
   THIS IS CREATED BY FINAL CUTTING PROCESS AFTER PLATING.
7. MANUFACTURING LOGO, PART NUMBER AND YEAR-WEEK CODE.
8. 5P(DC)-24S-3P(AC) IS SHOWN FOR ILLUSTRATION.
   CONNECTOR CONFIGURATION IS AVAILABLE UP TO 203MM/8INCH.
   PLEASE CONTACT MOLEX SALES PERSONNEL FOR OTHER
   CONFIGURATION AND OPTION NEEDED.

OBS TIN/LEAD P/N
EC NO: S2006-0767 2006/04/03
DRWN:MLONG 2006/04/03
CHKD:NAGESHKN 2006/04/06
APPR:PTLIM
DESCRIPTION
D
REV

QUALITY SYMBOLS
▼=0
▽=0

GENERAL TOLERANCES (UNLESS SPECIFIED)

	mm	INCH
4 PLACES	± ---	± ---
3 PLACES	± ---	± .005
2 PLACES	± 0.13	± .010
1 PLACE	± 0.25	± ---

ANGULAR ± 3 °

DRAFT WHERE APPLICABLE MUST REMAIN WITHIN DIMENSIONS

DIMENSION STYLE: MM/IN
SCALE: NTS
DESIGN UNITS: METRIC
THIRD ANGLE PROJECTION

DRAWN BY: BHLOW DATE: 2002/11/20
CHECKED BY: PTLIM DATE: 2002/11/26
APPROVED BY: SKTOH DATE: 2002/11/27

TITLE: AC/DC POWER RECEPTACLE P(A)AC-S-P(B)DC CONFIG. R/A, T/H, BOARD-LOCK

molex MOLEX INCORPORATED

MATERIAL NO.: SEE TABLE
DOCUMENT NO.: SD-87664-011
SHEET NO.: 2 OF 3
SIZE: A3

THIS DRAWING CONTAINS INFORMATION THAT IS PROPRIETARY TO MOLEX INCORPORATED AND SHOULD NOT BE USED WITHOUT WRITTEN PERMISSION

PART NUMBER	P-S-P CONFIGURATION			DIM A	DIM B	DIM C	DIM D	DIM E	DIM F	DIM G	RECESSED POWER PIN LOCATION		PACKAGING
	POWER BETA DC	SIGNAL	POWER ALPHA AC										
87664-2000	5	24	3	86.36 3.400	78.74 3.100	77.47 3.050	62.88 2.475	27.94 1.100	12.70 .500	17.78 .700	A B	2, 3 1, 2, 3, 4, 5	TRAY
87664-2001	6	24	3	92.71 3.650	85.09 3.350	83.82 3.300	69.23 2.725	34.29 1.350	12.70 .500	17.78 .700	A B	2, 3 1, 2, 3, 4, 5, 6	TRAY

OBS TIN/LEAD P/N
EC NO: S2006-0767 2006/04/03
DRWN:MLONG 2006/04/03
CHKD:NAGESHKN 2006/04/06
APPR:PTLIM
DESCRIPTION
REV
D

QUALITY SYMBOLS
▼=0
▽C=0

GENERAL TOLERANCES (UNLESS SPECIFIED)

	mm	INCH
4 PLACES	± ---	± ---
3 PLACES	± ---	± .005
2 PLACES	± 0.13	± .010
1 PLACE	± 0.25	± ---
ANGULAR ± 3 °		

DRAFT WHERE APPLICABLE MUST REMAIN WITHIN DIMENSIONS

DIMENSION STYLE: MM/IN
SCALE: NTS
DESIGN UNITS: METRIC
THIRD ANGLE PROJECTION

DRAWN BY: BHLOW DATE: 2002/11/20
CHECKED BY: PTLIM DATE: 2002/11/26
APPROVED BY: SKTOH DATE: 2002/11/27

TITLE: AC/DC POWER RECEPTACLE P(A)AC-S-P(B)DC CONFIG. R/A, T/H, BOARD-LOCK

molex MOLEX INCORPORATED

MATERIAL NO.: SEE TABLE
DOCUMENT NO.: SD-87664-011
SHEET NO.: 3 OF 3
SIZE: A3

THIS DRAWING CONTAINS INFORMATION THAT IS PROPRIETARY TO MOLEX INCORPORATED AND SHOULD NOT BE USED WITHOUT WRITTEN PERMISSION