INTEGRATED CONNECTOR MODULES

0875-1G2T-E3 Gigabit Ethernet MagJack® 1 x 2 with LEDs

RoHS 2002/95/EC

LED1 POLARITY			LED2 POLARITY		
PIN 11	PIN 12	COLOR	PIN 13	PIN 14	COLOR
+	-	GREEN	+	-	GREEN

ELECTRICAL CHARACTERISTICS @ 25°C

TURNS RATIO	
TP1	1CT : 1CT ±2%
TP2	1CT : 1CT ±2%
TP3	1CT : 1CT ±2%
TP4	1CT : 1CT ±2%
OCL @ 100kHz/100mVRMS	350µH MIN.
8mA DC BIAS (0°C - 70°C)	
INS. LOSS	
100KHz TO 125MHz	-1.2 dB MAX
RET. LOSS (MIN) @ 100OHMS ±15%	
0.5MHz-40MHz	-18 dB
40MHz-100MHz	-12+20LOG(f/80MHz) dB
CM TO CM REJ	
100kHz - 100MHz	-30 dB MIN
CM TO DM REJ	
100kHz - 100MHz	-35 dB MIN
CROSS TALK	
1MHz-100MHz	-35 dB MIN
HIPOT (Isolation Voltage):	1500 Vrms or 2250 VDC
100% OF PRODUCT TESTED IN PRODUCTION	
LED 1 & 2	
VF (FORWARD VOLTAGE)	IF=20mA GREEN 2.2V TYP.
λD (DOMINANT WAVELENGTH)	IF=20mA GREEN 565nm TYP.

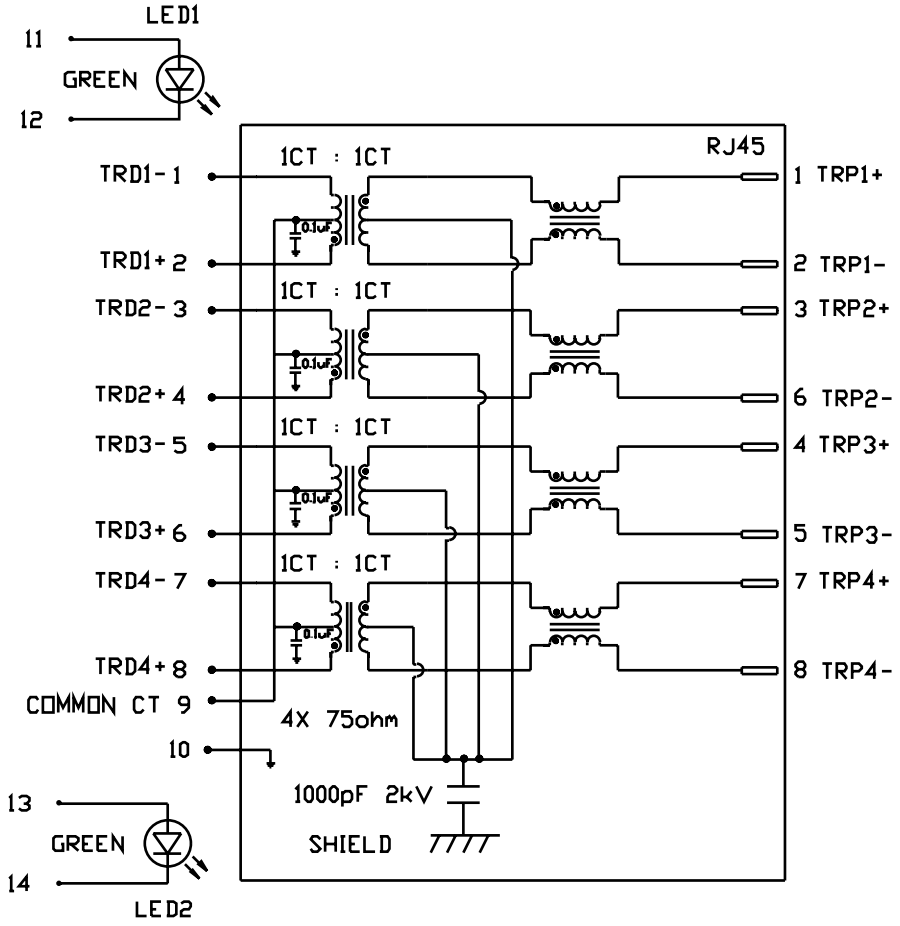

MagJack®

©2005 Bel Fuse Inc. Specifications subject to change without notice. 03.05

INTEGRATED CONNECTOR MODULES

0875-1G2T-E3 Gigabit Ethernet MagJack® 1 x 2 with LEDs

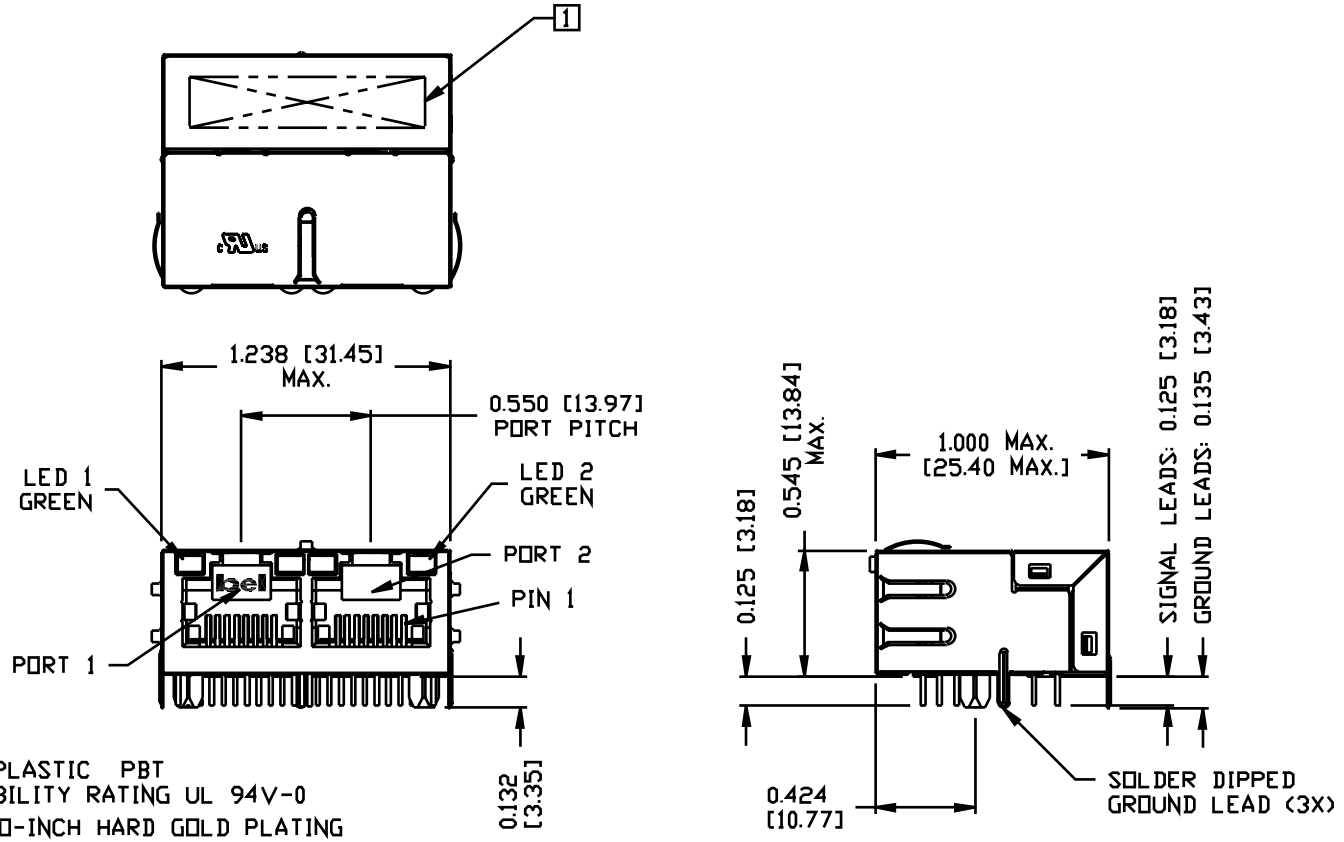

NOTES:

PLASTIC HOUSING: THERMOPLASTIC PBT
FLAMMABILITY RATING UL 94V-0

CONTACTS PLATING: 15 MICRO-INCH HARD GOLD PLATING

PINS: TIN-COATED COPPER WIRE, DIA 0.018 INCH.

METAL SHIELD: NICKEL PLATED ON COPPER ALLOY.
(ALL GROUND LEADS ARE SOLDER DIPPED)

[1] MARK PART WITH MFG LOGO, PART NUMBER, DATE CODE AND MFG NAME.

RoHS COMPLIANCE, PER EU DIRECTIVE 2002/95/EC.

c UL us UL RECOGNIZED - FILE #E196366 AND E169987.

MagJack®

©2005 Bel Fuse Inc. Specifications subject to change without notice. 03.05

INTEGRATED CONNECTOR MODULES

0875-1G2T-E3 Gigabit Ethernet MagJack® 1 x 2 with LEDs

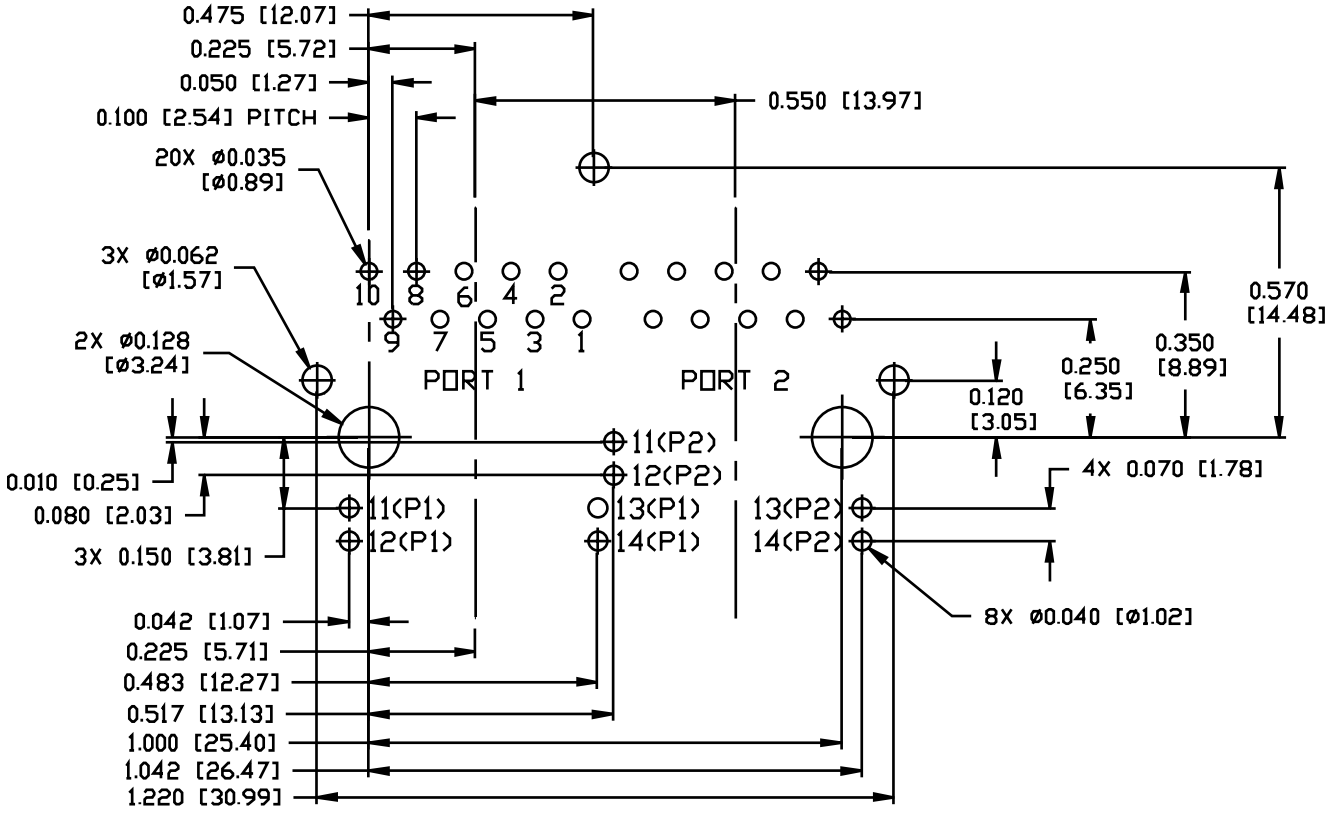

RECOMMENDED PCB FOOTPRINT
COMPONENT SIDE VIEW

MagJack®

©2005 Bel Fuse Inc. Specifications subject to change without notice. 03.05

INTEGRATED CONNECTOR MODULES

0875-1G2T-E3 Gigabit Ethernet MagJack® 1 x 2 with LEDs

SUGGESTED PANEL OPENING

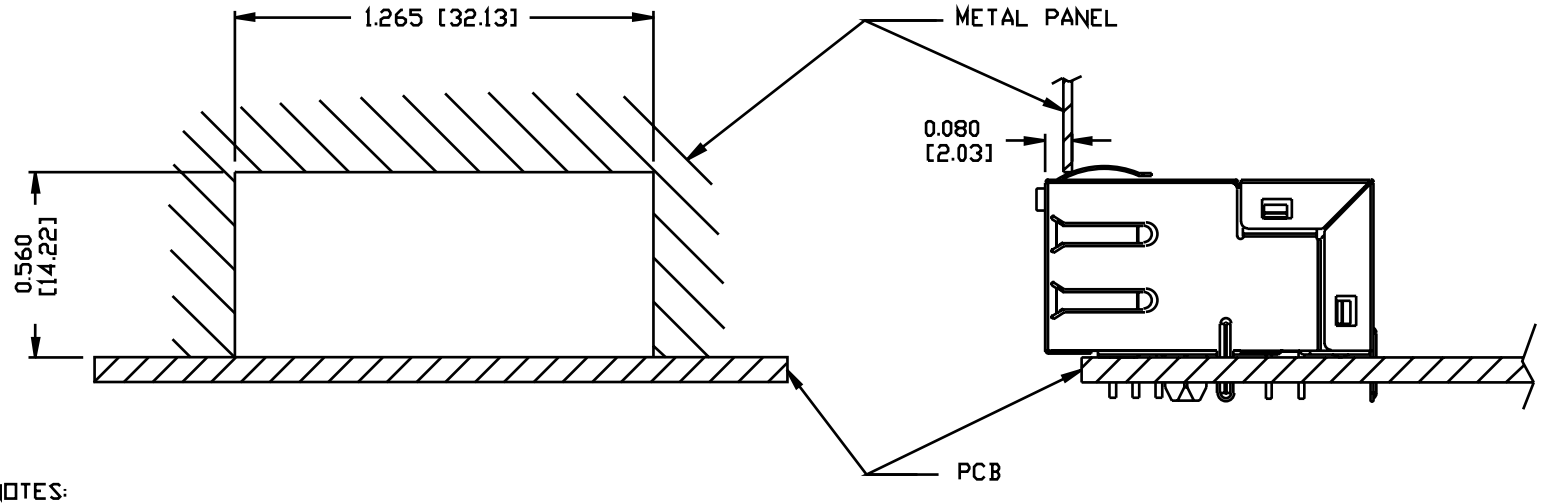

NOTES:

THE DISTANCE OF PANEL INSIDE SURFACE RELATIVE TO FRONT SURFACE OF PART IS ONLY A SUGGESTION.
IN CASE THIS DISTANCE IS DIFFERENT, THE REQUIRED PANEL OPENING DIMENSIONS CHANGE ACCORDINGLY.

PACKING INFORMATION

PACKING TRAY : 0200-9999-G4 (TOP)
0200-9999-G5 (BOTTOM)

PACKING QUANTITY : 49 PCS FINISHED GOODS PER TRAY
8 TRAYS (392 PCS FINISHED GOODS) PER CARTON BOX

NOTE : CARDBOARDS ARE PLACED BETWEEN LAYERS OF PACKING TRAY INSIDE CARTON BOX
(INCLUDE THE UPPERMOST AND LOWERMOST TRAY)

MagJack®

©2005 Bel Fuse Inc. Specifications subject to change without notice. 03.05