Evaluation Board for 10W Single-Output Switch-Mode Power Supply

1 Description



The iW1818-EVAL evaluation board implements a 10W power supply based on Dialog Semiconductor's iW1818 ***AccuSwitch™*** digital off-line power supply controller IC. The evaluation board supplies a 5V, 2A regulated output voltage using a primary-side controlled quasi-resonant flyback converter that meets the U.S. Department of Energy's most recent level VI efficiency standard and the EU's Code of Conduct, Version 5, Tier 2 standard for both active mode and no-load standby power consumption.

The iW1818 controller integrates an 800V power BJT transistor to lower the power supply BOM cost and uses Dialog's advanced ***PrimAccurate™*** digital control technology to eliminate the need for external secondary-side feedback components, further reducing component count and cost, while improving reliability. It operates in quasi-resonant mode to improve efficiency and help meet EMI standards. This quasi-resonant operation and Dialog's ***EZ-EMI®*** technology enable excellent EMI performance with minimal external filtering. Proprietary control technology allows high efficiency across a broad range of loads, which enables the iW1818 to meet stringent international standards for power supply efficiency.

2 Features

- Wide input voltage range: $90V_{AC}$ to $264V_{AC}$
- Output voltage: 5V
- Output current: 2A
- Total output power: 10W max.
- Integrated 800V BJT
- Active mode efficiency > 80%
- Supports high capacitance loads up to 6,000µF
- Low no-load power: < 50mW (at 230 V_{AC})
- ***EZ-EMI®*** technology: excellent EMI performance with a minimum of EMI filtering components
- Quasi-resonant operation
- Low component count and small PCB footprint
- iW1818 IC protections:
  - » Output short-circuit, over-current, over-voltage
  - » Input voltage protection: brown-out, brown-in, unplug
  - » Over-temperature protection - internal sensor

3 Applications

- Power Supplies for:
  - » White Goods
  - » Home Appliances
  - » Industrial Control
  - » Network Devices

© 2016 Dialog Semiconductor

WARNING

Disclaimer for High Voltage (Mains Powered) Evaluation Boards

Warning

This evaluation board is powered by AC mains voltage. When powered, this evaluation board generates non-insulated high voltages which may produce electrical shock, burn, and/or fire hazards, resulting in risk of property damage, personal injury, and/or death.

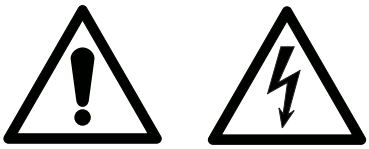

When the evaluation board is powered, never touch the board or its electrical circuits since they may be operating at high voltages that can cause an electrical shock hazard.

TO BE USED FOR EVALUATION PURPOSES ONLY

This board is intended for evaluation purposes only and not intended for commercial use in an end product. Any other use is strictly prohibited by Dialog Semiconductor.

WORK AREA AND PERSONAL SAFETY

This board should be used in a test area/laboratory specifically designed and designated for working with, and evaluating high-voltage electrical devices. Only trained and qualified professional personnel with experience, knowledge and training in the use of high-voltage electrical circuits should use this evaluation board. Trained personnel must use required personal protective equipment and required laboratory equipment when working with the evaluation board.

The professional personnel operating this evaluation board and the test area/laboratory in which it is operated must be qualified according to the local regulations, guidelines and labor laws applicable to working with non-isolated mains voltages and high voltage circuits.

An isolated housing is highly recommended when using this evaluation board.

Use this evaluation board at your own risk.

NOT AGENCY APPROVED

This evaluation board has not been agency tested or approved for safety, technical performance, and/or regulatory requirements, such as electromagnetic interference or other technical regulatory or safety requirements.

© 2016 Dialog Semiconductor

4 Evaluation Board Specifications

The table below shows the electrical specifications of the evalution board specified at T_A = 25ºC, unless otherwise noted.

Description	Symbol	Min	Typ	Max	Units	Comment
Input						
Voltage	V_{IN}	90		264	V_{AC}	2 wire
Frequency	f_{LINE}	47	50/60	63	Hz	
No-load input power (230V_{AC})				50	mW	
Output						
Output voltage	V_{OUT}	4.75	5.00	5.25	V	Measured at the end of PCB
Output current	I_{OUT}	0		2	A	
Output ripple voltage	V_{RIPPLE}			200	mV_{P_P}	Connected with 10µF E-cap and 100nF C-cap; I_{OUT} = 2A@T_A = 25ºC 20MHz Bandwidth
Total Output Power						
Continuous output power	P_{OUT}		10		W	
Over current protection	OCP			2.8	A	Auto-restart
Active mode efficiency	η	80.7			%	Average of efficiency measured at 25%/50%/75%/100% V_{IN} = 115V_{AC}
Environmental						
Safety (Note 1)	Designed to Meet UL1310 (up to 120V_{AC}) Designed to Meet EN60335-1:2012					
Ambient temperature	T_{AMB}	0		40	ºC	Free convection, sea level

Note 1: The iW1818-EVAL has been designed to meet EN60335-1:2012 and UL1310 (up to 120V_{AC}), however individual boards have not been tested or verified to these standards.

© 2016 Dialog Semiconductor

5 Schematic

The schematic shown in Figure 5.1 is the complete schematic for the evalution board. The specific part numbers can be found in the Bill-of-Materials in section 6.

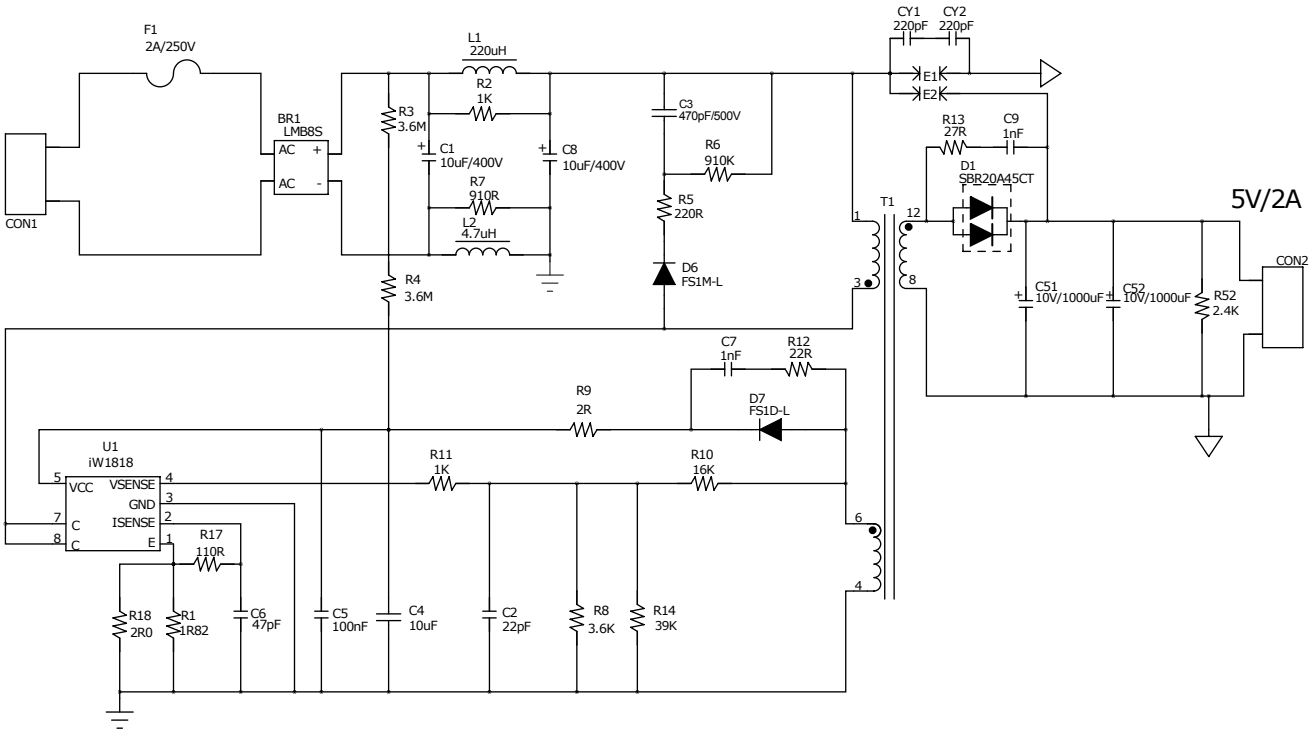

Figure 5.1 : Complete Evalution Board Schematic for the iW1818-EVAL Board.

© 2016 Dialog Semiconductor

6 Bill of Materials

Table 1: Bill-of-Materials List for EVB iW1818-EVAL

Item	Qty.	Ref.	Description	Footprint	Mfg. Part Number	Manufacturer
1	1	U1	iW1818, Off-line digital PWM Controller with 4A/800V BJT co-packed, DIP 7	DIP-7	iW1818-00	Dialog Semiconductor
2	1	BR1	LMB8S,800V,1A,Bridge rectifier	LMBS -1	LMB8S-TP	Micro Commercial Components Corp.
3	2	C1, C8	CAP ALUM 10uF 20%,400V, Φ10X16mm, Lead Spacing: 5mm	10mmx16mm	EKXJ401ELL100MJ16S	Nippon Chemi-Con
4	1	C2	22pF,25V,NPO,SMD-0603	0603	CC603JRNPO8BN220	YAGEO Corporation
5	1	C3	470pF,500V,X7R,SMD-1206	1206	CC1206KKX7RBBB471	YAGEO Corporation
6	1	C4	10uF10%,50V,X5R,SMD-1206	1206	GRM31CR61H106KA12L	Murata Electronics
7	1	C5	100nF 10%,50V,X7R,SMD-0805	0805	CC0805KRX7R9BB104	YAGEO Corporation
8	1	C6	47pF 10%,10V,SMD-0603	0603	CC0603KRNPO9BN470	YAGEO Corporation
9	2	C7,C9	1nF 10%,100V,X7R,SMD-0805	0805	CC0805KRX7R0BB102	YAGEO Corporation
10	2	CY1,CY2	220pF,250V ,Y-cap	Radial, Disc	DE1B3KX221KN4AN01F	Murata Electronics
11	2	C51,C52	1000uF,10V,Φ8X20,E-CAP	CE8X15	UPA1A102MPD1TD	Nichicon
12	1	D1	SBR20A45CT,20A,45V	TO-220AB	SBR20A45CT	Diodes Incorporated
13	1	D6	FS1M-L, 1A1000V,Fast Recovery Rectifier (Trr=500ns)	DO-214AC	FS1M-LTP	Micro Commercial Components Corp.
14	1	D7	FS1D-L, 1A200V,Fast Recovery Rectifier (Trr=150ns)	DO-214AC	FS1D-LTP	Micro Commercial Components Corp.
15	1	F1	2A,250V, Fuse, Φ3.6X10mm	Axial-3.6x10	0874002.MXEP	Littelfuse Inc.
16	1	L1	220uH,155mA,Color Ring Inductor, 0410	Axial-04x10	77F221J-TR-RC	Bourns Inc.
17	1	L2	4.7uH,Chip Inductor(Chip Coil)	0805	LQM21FN4R7M80L	Murata Electronics
18	1	R1	1.82Ω±1%,SMD-1206	1206	RC1206FR-071R82L	YAGEO Corporation
19	1	R2	1KΩ±5%,SMD-0805	0805	RC0805JR-071KL	YAGEO Corporation
20	2	R3,R4	3.6MΩ±5%,SMD-1206	1206	RC1206JR-073M6L	YAGEO Corporation
21	1	R5	220Ω±5%,SMD-1206	1206	RC1206JR-07220RL	YAGEO Corporation
22	1	R6	910KΩ±5%,SMD-1206	1206	RC1206JR-07910KL	YAGEO Corporation
23	1	R7	910Ω±5%,SMD-0805	0805	RC0805JR-07910RL	YAGEO Corporation
24	1	R8	3.6KΩ±1%,SMD-0603	0603	RC0603FR-073K6L	YAGEO Corporation
25	1	R9	2Ω±5%,SMD-0603	0603	RC0603JR-072RL	YAGEO Corporation
26	1	R10	16KΩ±1%,SMD-0603	RS0603	RC0603FR-0716KL	YAGEO Corporation
27	1	R11	1KΩ±5%,SMD-0603	0603	RC0603JR-071KL	YAGEO Corporation
28	1	R12	22Ω±5%,SMD-0805	0805	RC0805JR-0722RL	YAGEO Corporation
29	1	R13	27Ω±5%,SMD-0805	0805	RC0805JR-0727RL	YAGEO Corporation
30	1	R14	39KΩ±1%,SMD-0603	0603	RC0603FR-0739KL	YAGEO Corporation
31	1	R17	110Ω±5%,SMD-0603	0603	RC0603JR-07110RL	YAGEO Corporation
32	1	R18	2.0Ω±1%,SMD-1206	1206	RC1206FR-072RL	YAGEO Corporation
33	1	R52	2.4KΩ±5%,SMD-0805	0805	RC0805JR-072K4L	YAGEO Corporation
34	1	CON1	Serie 2169 - 7.50mm Horizatonal Entry Modular with Rising Cage Clamp - 3.5mm² Wires WR-TBL		691 216 910 002	Würth Elektronik
35	1	CON2	WR-TBL Terminal block-serie 101, 5.00mm - Modular-blue-Horizontal entry with pressure clamp - 12.6mm		691 101 710 002	Würth Elektronik
36	1	T1	EE20/10/6 (EF20),14-Pin EXT, THT, Horizontal for 5V2A		750 343 107	Würth Elektronik
37	4	Supporter	Self-Retaining Spacer WA-SNSR ,Nylon 66, natural		702 917 000	Würth Elektronik

© 2016 Dialog Semiconductor

Disclaimer

This evaluation board is provided for evaluation purposes only and is not intended for commercial use in any end product. Dialog Semiconductor expressly disclaims all warranties, express, implied or statutory, including (but not limited to) the implied warranties of non-infringement, suitability for a specific application(s) or end product(s), product quality or reliability. All risks and liability regarding quality, use or performance of this evaluation board are those of the customer/user.

The user, and/or user's employer, if user is using this evaluation board for employer-related purposes, assumes all responsibility and liability for proper and safe handling of the evaluation boards and indemnify Dialog Semiconductor from any and all claims arising from use of the evaluation board.

The user, and/or user's employer, if user is using this evaluation board for employer-related purposes, understands that this evaluation board has not been agency tested or approved for safety, technical performance, and/or regulatory requirements, by any agency. This includes electromagnetic interference or other technical regulatory or safety testing and certifications.

The user, and/or user's employer, if user is using this evaluation board for employer-related purposes, assumes all responsibility for using this evaluation board in a test area or laboratory which is qualified and/or certified according to the local regulations, guidelines and labor laws applicable to working with non-isolated mains voltages and high voltage circuits.

Information in this document is believed to be accurate and reliable. However, Dialog Semiconductor does not give any representations or warranties, expressed or implied, as to the accuracy or completeness of such information. Dialog Semiconductor furthermore takes no responsibility whatsoever for the content in this document if provided by any information source outside of Dialog Semiconductor.

Dialog Semiconductor reserves the right to change without notice the information published in this document, including without limitation the specification and the design of the related semiconductor products, software and applications.

Applications, software, and semiconductor products described in this document are for illustrative purposes only. Dialog makes no representation or warranty that such applications, software and semiconductor products will be suitable for the specified use without further testing or modification. Unless otherwise agreed in writing, such testing or modification is the sole responsibility of the customer and Dialog excludes all liability in this respect.

Customer notes that nothing in this document may be construed as a license for customer to use the Dialog products, software and applications referred to in this document. Such license must be separately sought by customer with Dialog Semiconductor.

All use of Dialog Semiconductor products, software and applications referred to in this document are subject to Dialog Semiconductor's Standard Terms and Conditions of Sale, available on the company website (www.dialog-semiconductor.com) unless otherwise stated.

Dialog and the Dialog logo are trademarks of Dialog Semiconductor plc or its subsidiaries. All other product or service names are the property of their respective owners.

© Copyright 2016 Dialog Semiconductor. All rights reserved.

Contacting Dialog Semiconductor

United Kingdom
Dialog Semiconductor (UK) Ltd
Phone: +44 1793 757700

Germany
Dialog Semiconductor GmbH
Phone: +49 7021 805-0

The Netherlands
Dialog Semiconductor B.V.
Phone: +31 73 640 88 22

Email
info_pcbg@diasemi.com

North America
Dialog Semiconductor Inc.
Phone: +1 408 845 8500

Japan
Dialog Semiconductor K. K.
Phone: +81 3 5425 4567

Taiwan
Dialog Semiconductor Taiwan
Phone: +886 281 786 222

Web site:
www.dialog-semiconductor.com

Singapore
Dialog Semiconductor Singapore
Phone: +65 648 499 29

Hong Kong
Dialog Semiconductor Hong Kong
Phone: +852 2607 4271

Korea
Dialog Semiconductor Korea
Phone: +82 2 3469 8200

China
Dialog Semiconductor (Shenzhen)
Phone: +86 755 2981 3669

Dialog Semiconductor (Shanghai)
Phone: +86 21 5424 9058