molex
one company > a world of innovation

This document was generated on 06/08/2010

PLEASE CHECK WWW.MOLEX.COM FOR LATEST PART INFORMATION

Part Number: 0857290102
Status: Active
Overview: magnetic_modular_jacks
Description: HyperJack™ 1000 PoE+ PSE Integrated Connector Module, 2x4, Without LEDs

Documents:
3D Model
Drawing (PDF)
RoHS Certificate of Compliance (PDF)



Series image - Reference only

General

Product Family	Modular Jacks/Plugs
Series	85729
Component Type	PCB Jack
Magnetic	Yes
More Detailed Tech Information	*For product specifications please contact your Molex sales representative
Overview	magnetic_modular_jacks
Performance Category	5e
Power over Ethernet (PoE)	PoE+
Product Name	HyperJack™PoE

Physical

Boot Color	N/A
Color - Resin	Black
Durability (mating cycles max)	750
Inverted / Top Latch	Yes
Lightpipes/LEDs	None
Material - Metal	Brass, Copper Alloy
Material - Plating Mating	Gold
Material - Plating Termination	Tin
Material - Resin	Thermoplastic Polyurethane
Orientation	Right Angle (Side Entry)
PCB Locator	Yes
PCB Retention	Yes
Packaging Type	Tray
Pitch - Mating Interface (in)	0.040 In
Pitch - Mating Interface (mm)	1.02 mm
Pitch - Term. Interface (in)	0.040 In
Pitch - Term. Interface (mm)	1.02 mm
Plating min: Mating (µin)	30
Plating min: Mating (µm)	0.76
Plating min: Termination (µin)	50.8
Plating min: Termination (µm)	1.27
Ports	8
Positions / Loaded Contacts	8/8
Surface Mount Compatible (SMC)	No
Temperature Range - Operating	0°C to +70°C
Termination Interface: Style	Through Hole
Waterproof / Dustproof	No
Wire/Cable Type	N/A

Electrical

Current - Maximum per Contact	1.5A
Grounding to PCB	Yes
Grounding to Panel	Yes
Shielded	Yes

EU RoHS
ELV and RoHS Compliant
REACH SVHC
Not Reviewed
Halogen-Free Status
Not Reviewed

China RoHS

Need more information on product environmental compliance?

Email productcompliance@molex.com
For a multiple part number RoHS Certificate of Compliance, click here

Please visit the Contact Us section for any non-product compliance questions.

Search Parts in this Series
85729Series

Mates With
Plugs according to IEC 60603-7

Voltage - Maximum	48V

Material Info

Reference - Drawing Numbers

Product Specification	RPS-85719-001
Sales Drawing	SD-85729-101

This document was generated on 06/08/2010

PLEASE CHECK WWW.MOLEX.COM FOR LATEST PART INFORMATION

FRONT VIEW HYPER JACK 1000 POE+ ICM LED VERSION P/N 85729-0101

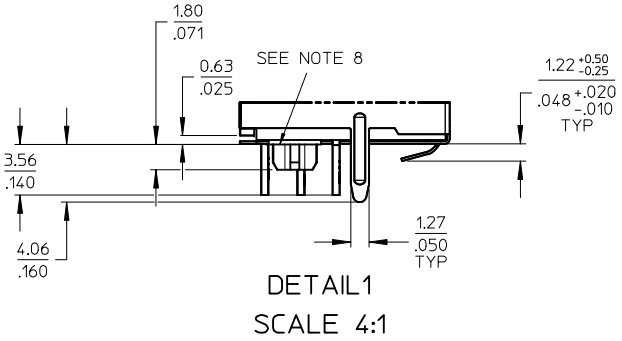

DETAIL1
SCALE 4:1

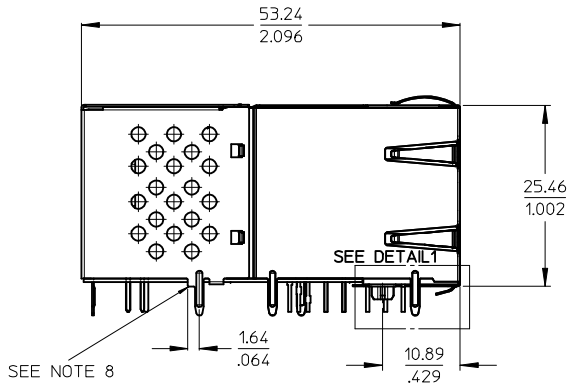

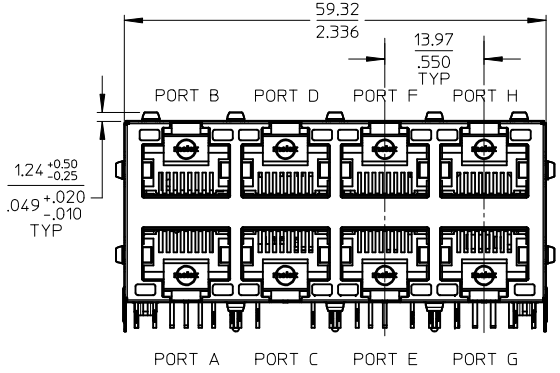

FRONT VIEW HYPERJACK 1000POE+ ICM NON LED VERSION P/N 85729-0102

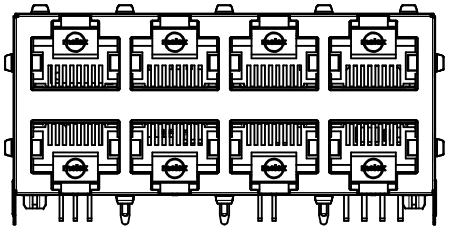

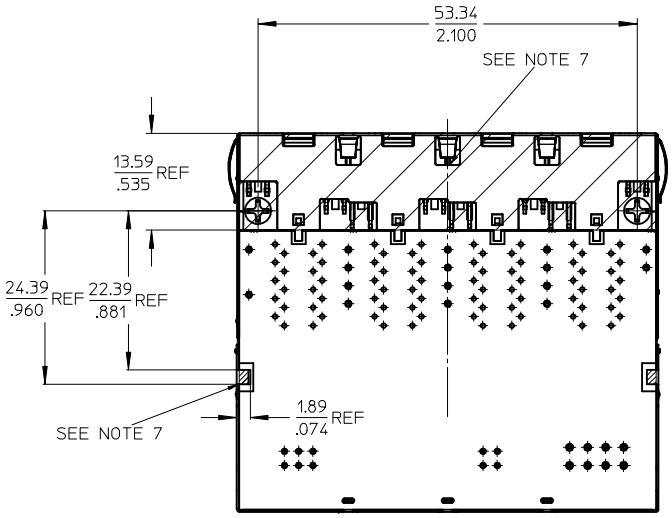

P / N	VERSION
85729-0101	LED VERSION
85729-0102	NON LED VERSION

NOTES:
1 - SHIELD MATERIAL: BRASS, PLATING: Ni PRE-PLATING
2 - PLASTIC MATERIAL: NAGASE-D-VALOX 420 SED BLACK, 30%GR, UL 94V-0\5V (PBT)
3 - TERMINALS MATERIAL: COPPER ALLOY
RJ45 CONTACT PLATING: 0.76µm GOLD OVER 1.9µm Ni
SOLDER TERMINALS: 3µm Sn
4 - JACK TO BE MATED WITH FCC 68.5 PLUGS
5 - PRODUCT SPECIFICATION: PS-85719-001
6 - PACKAGING SPECIFICATION: PK-85729-101
7 - TRACES WITHOUT INSULATION NOT ALLOWED IN THE DASHED AREAS.
(TO AVOID SHORTS TO SHIELD)
8 - STAND OFF TO SYSTEM BOARD

ENTER DESCRIPTION
EC NO: MG2009-0072
DRWN:JBADER 2009/08/06
CH'KD:MMANGARUDOV 2009/08/06
APPR:SSTEINKE 2009/08/07
DESCRIPTION
REV 1

QUALITY SYMBOLS
▼=0
▽=0

GENERAL TOLERANCES (UNLESS SPECIFIED)

	mm	INCH
4 PLACES	± ---	± ---
3 PLACES	± ---	± ---
2 PLACES	± 0.25	± ---
1 PLACE	± 0.5	± ---
ANGULAR ± .5 °		

DRAFT WHERE APPLICABLE MUST REMAIN WITHIN DIMENSIONS

DIMENSION STYLE: MM ONLY
SCALE: 2:1
DESIGN UNITS: METRIC
THIRD ANGLE PROJECTION

DRAWN BY: JBADER DATE: 2009/03/12
CHECKED BY: MMANGARUDOV DATE: 2009/03/12
APPROVED BY: SSTEINKE DATE: 2009/03/12

TITLE: HYPERJACK 1000 POE+ INTEGRATED CONNECTOR MODULE

MOLEX INCORPORATED

MATERIAL NO.: SEE BOM
DOCUMENT NO.: SD-85729-101
SHEET NO.: 1 OF 3

SIZE A2

THIS DRAWING CONTAINS INFORMATION THAT IS PROPRIETARY TO MOLEX INCORPORATED AND SHOULD NOT BE USED WITHOUT WRITTEN PERMISSION

FOOT PRINT FOR NON LED VERSION (85729-0003)
MISSING DIMENSIONS SEE LED VERSION

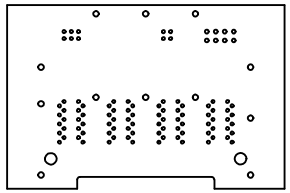

SCALE 1:1

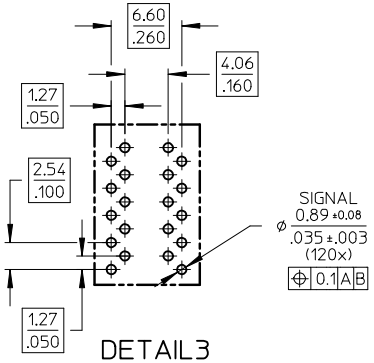

DETAIL3
SCALE 3:1

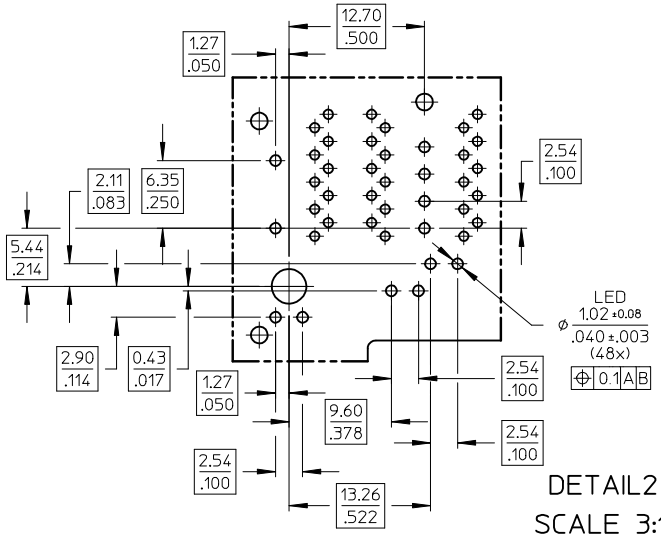

DETAIL2
SCALE 3:1

FOOT PRINT OUT FOR
LED VERSION

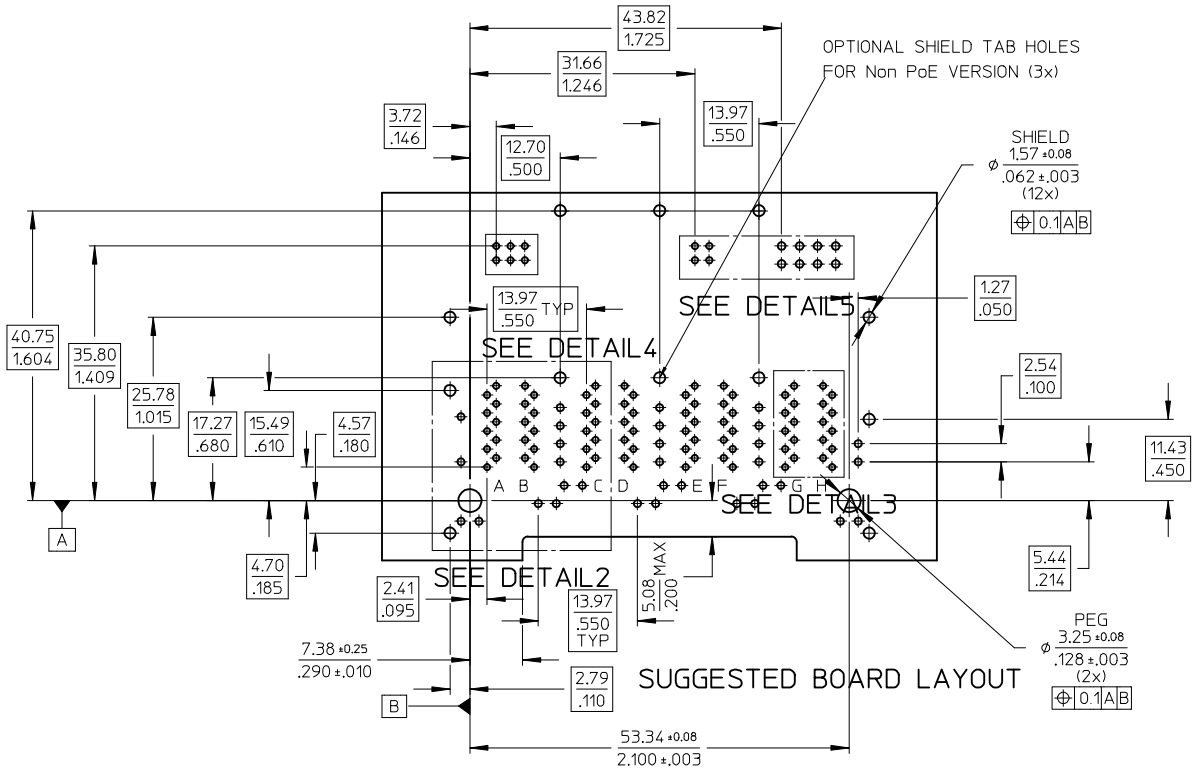

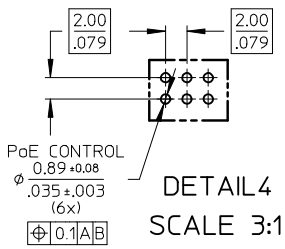

DETAIL4
SCALE 3:1

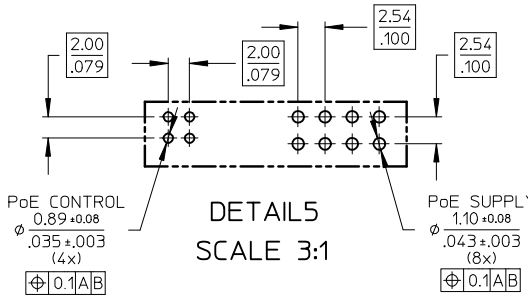

DETAIL5
SCALE 3:1

ENTER DESCRIPTION EC NO: MG2009-0072 DRWN:JBADER 2009/08/06 CH'KD:MMANGARUDOV 2009/08/06 APPR:SSTEINKE 2009/08/07 DESCRIPTION REV 1	QUALITY SYMBOLS ▼=0 ▽=0	GENERAL TOLERANCES (UNLESS SPECIFIED) mm / INCH 4 PLACES ± --- / ± --- 3 PLACES ± --- / ± --- 2 PLACES ± 0.25 / ± --- 1 PLACE ± 0.5 / ± --- ANGULAR ± .5 ° DRAFT WHERE APPLICABLE MUST REMAIN WITHIN DIMENSIONS

DIMENSION STYLE: MM ONLY	SCALE: 2:1	DESIGN UNITS: METRIC	THIRD ANGLE PROJECTION
DRAWN BY: JBADER DATE: 2009/03/12	TITLE: HYPERJACK 1000 POE+ INTEGRATED CONNECTOR MODULE		
CHECKED BY: MMANGARUDOV DATE: 2009/03/12			
APPROVED BY: SSTEINKE DATE: 2009/03/12	molex MOLEX INCORPORATED		
MATERIAL NO.: SEE SHEET 1	DOCUMENT NO.: SD-85729-101	SHEET NO.: 2 OF 3	
SIZE: A2	THIS DRAWING CONTAINS INFORMATION THAT IS PROPRIETARY TO MOLEX INCORPORATED AND SHOULD NOT BE USED WITHOUT WRITTEN PERMISSION		

PRINTING
LED VERSION

HYPERJACK 1000 POE+ ICM
P/N: 85729-0101
S/N: X-RX-YYMMDD-XXXX
MADE IN CHINA

PRINTING
NON LED VERSION

HYPERJACK 1000 POE+ ICM
P/N: 85729-0102
S/N: X-RX-YYMMDD-XXXX
MADE IN CHINA

PRINTING

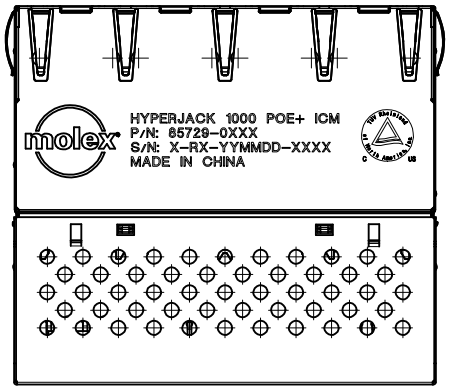

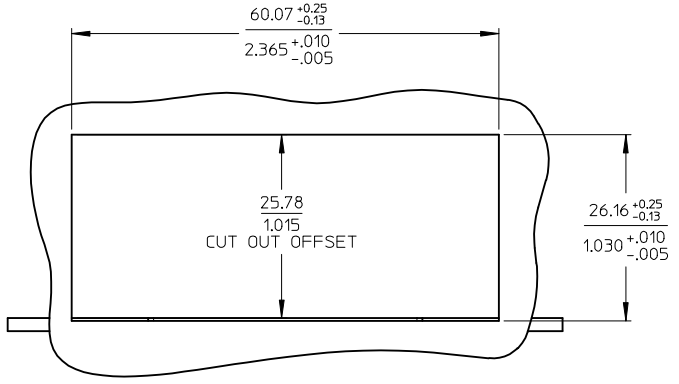

SUGGESTED PANEL CUT OUT

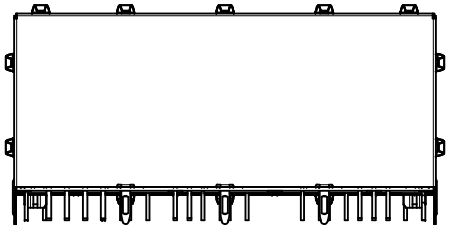

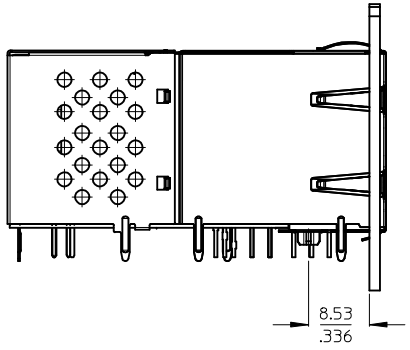

NOTES:
1 - PRINTING MARKED BY LASER
2 - INSCRIPTION:
  1st LINE: PART NAME
  2nd LINE: PART NUMBER
  3rd LINE: SERIES NUMBER -> MANUFACTURER ID - CONNECTOR REVISION -
    DATE CODE (YEAR, MONTH, DAY) - CONSECUTIVE NUMBER
  4th LINE: COUNTRY OF ORIGIN
3 - TUV LOGO

ENTER DESCRIPTION
EC NO: MG2009-0072
DRWN: JBADER 2009/08/06
CH'KD: MMANGARUDOV 2009/08/06
APPR: SSTEINKE 2009/08/07
DESCRIPTION
1
REV

QUALITY SYMBOLS
▼=0
▽=0

GENERAL TOLERANCES (UNLESS SPECIFIED)

	mm	INCH
4 PLACES	± ---	± ---
3 PLACES	± ---	± ---
2 PLACES	± 0.25	± ---
1 PLACE	± 0.5	± ---
ANGULAR ± .5 °		

DRAFT WHERE APPLICABLE MUST REMAIN WITHIN DIMENSIONS

DIMENSION STYLE: MM ONLY
SCALE: 2:1
DESIGN UNITS: METRIC
THIRD ANGLE PROJECTION

DRAWN BY: JBADER DATE: 2009/03/12
CHECKED BY: MMANGARUDOV DATE: 2009/03/12
APPROVED BY: SSTEINKE DATE: 2009/03/12

TITLE: HYPERJACK 1000 POE+ INTEGRATED CONNECTOR MODULE

MOLEX INCORPORATED

MATERIAL NO.: SEE SHEET 1
DOCUMENT NO.: SD-85729-101
SHEET NO.: 3 OF 3
SIZE: A2

THIS DRAWING CONTAINS INFORMATION THAT IS PROPRIETARY TO MOLEX INCORPORATED AND SHOULD NOT BE USED WITHOUT WRITTEN PERMISSION