molex
one company > a world of innovation

This document was generated on 05/17/2010

PLEASE CHECK WWW.MOLEX.COM FOR LATEST PART INFORMATION

Part Number: 0850420177
Status: Active
Overview: din_41612
Description: 2.54mm (.100") Pitch DIN 41612 Receptacle, Style C, 64 Circuits

Documents:
3D Model
Drawing (PDF)
RoHS Certificate of Compliance (PDF)

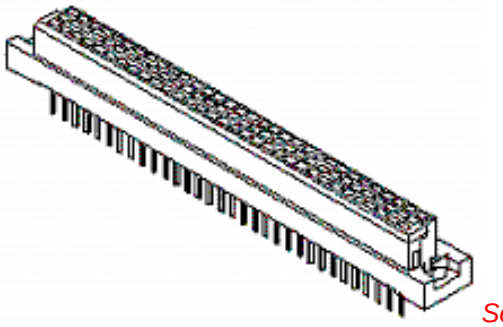

Series image - Reference only

Agency Certification

CSA	LR19980
UL	E29179

General

Product Family	Backplane Connectors
Series	85042
Application	Daughtercard
Component Type	PCB Receptacle
Overview	din_41612
Product Name	IEC 603-2/DIN 41612
Style	C

Physical

Circuits (Loaded)	64
Circuits (maximum)	96
Circuits Detail	Rows A & C
Durability (mating cycles max)	400
First Mate / Last Break	No
Flammability	94V-0
Guide to Mating Part	No
Keying to Mating Part	Yes
Number of Columns	32
Number of Pairs	Open Pin Field
Number of Rows	3
Orientation	Vertical
PC Tail Length (in)	0.177 In
PC Tail Length (mm)	4.50 mm
PCB Locator	No
PCB Retention	Yes
Packaging Type	Tray
Pitch - Mating Interface (in)	0.100 In
Pitch - Mating Interface (mm)	2.54 mm
Pitch - Term. Interface (in)	0.100 In
Pitch - Term. Interface (mm)	2.54 mm
Polarized to PCB	Yes
Stackable	No
Surface Mount Compatible (SMC)	No
Temperature Range - Operating	-55°C to +125°C

Electrical

Current - Maximum per Contact	2.5A
Data Rate	622.0 Mbps
Real Signals (per 25mm)	29
Shielded	No
Voltage - Maximum	250V AC (RMS)

Material Info

EU RoHS
ELV and RoHS Compliant
REACH SVHC
Not Reviewed
Halogen-Free Status
Not Reviewed

China RoHS

Need more information on product environmental compliance?

Email productcompliance@molex.com
For a multiple part number RoHS Certificate of Compliance, click here

Please visit the Contact Us section for any non-product compliance questions.

Search Parts in this Series
85042Series

Mates With
DIN 41612 Headers 85003 , 85013

Old Part Number	96S-6033-052V-2

Reference - Drawing Numbers

Sales Drawing	SD-85042-0001, SDA-85042-0001, SDA-85042-0177

This document was generated on 05/17/2010

PLEASE CHECK WWW.MOLEX.COM FOR LATEST PART INFORMATION

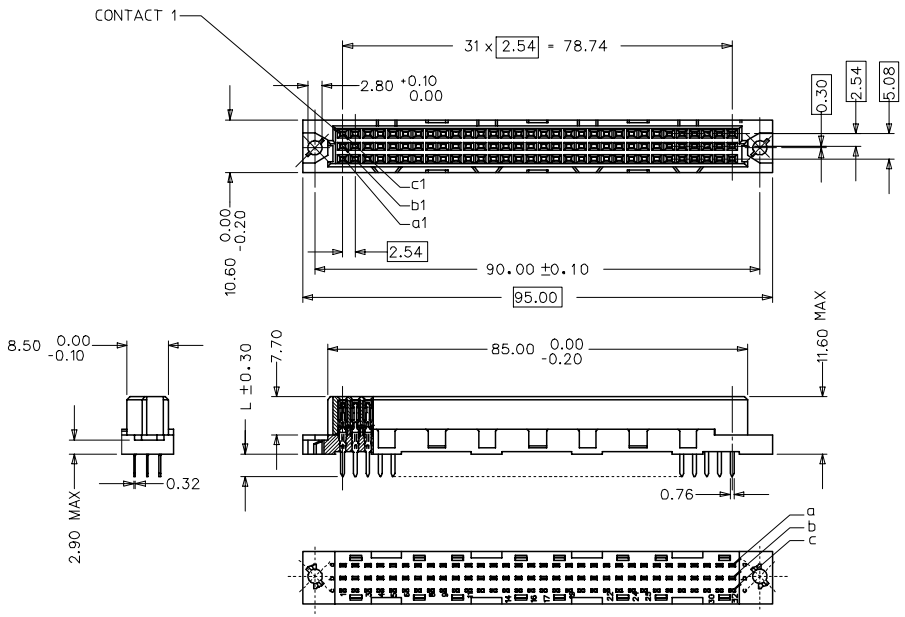

WITH MOUNTING CLIPS

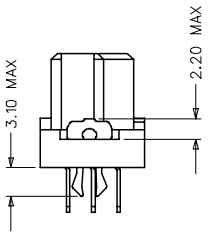

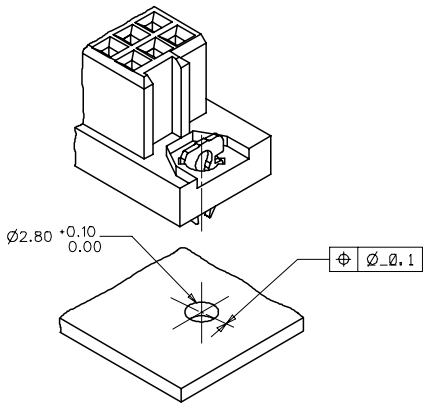

NOTES:
1) MATERIALS: THERMOPLASTIC POLYESTER,GLASS FILLED,
UL94V-0.COLOUR: PEBBLE GREY RAL 7032
TERMINAL - PHOSPHOR BRONZE
MOUNTING CLIP: STEEL
2) FINISH: TERMINAL:-
CONTACT AREA
1. PERFORMANCE LEVEL 1: SELECTIVE GOLD (Au), THICKNESS = 1.1 MICROMETER
OVER NICKEL, THICKNESS = 1.5 MICROMETER
2. PERFORMANCE LEVEL 2: SELECTIVE GOLD (Au), THICKNESS = 0.6 MICROMETER
OVER NICKEL, THICKNESS = 1.5 MICROMETER
3. PERFORMANCE LEVEL 3: SELECTIVE GOLD (Au), THICKNESS = 0.3 MICROMETER
OVER NICKEL, THICKNESS = 1.5 MICROMETER
TERMINATION AREA:
SELECTIVE TIN, THICKNESS = 5 MICROMETER
OVER NICKEL, THICKNESS = 1.5 MICROMETER OVERALL
3) MOUNTING CLIP:-
TIN (Sn), THICKNESS = 5-10 MICROMETER,
OVER NICKEL (Ni), THICKNESS = 2.5 MICROMETER
4) FOR NON MOUNTING CLIP OPTION, CONNECTOR TO BE SECURED WITH
RIVETS: 2 TUBULAR RIVETS 2.5 x 0.3 ... DIN 7340
SCREWS: 2 CHEESEHEAD SCREWS M2.5 x .... DIN 84 AND 2 HEXAGONAL NUTS M2.5 DIN 934
5) MATERIAL No, BATCH CODE, UL AND CSA MARKING TO BE PRINTED ON THE CONNECTOR.
6) CUT FACES OF TIP WITHOUT PLATING PERMITTED.
7) PRODUCT SPECIFICATION PS:36500-001

RECOMMENDED PCB LAYOUT
COMPONENT SIDE

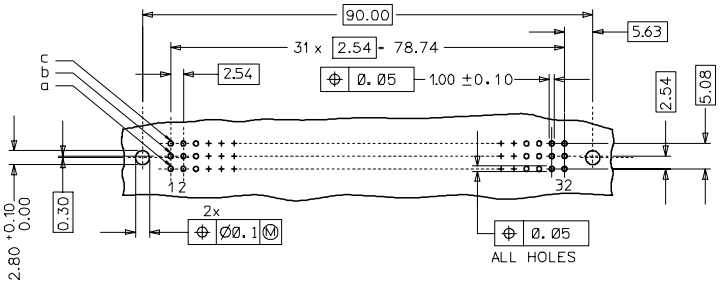

RoHS COMPLIANT

ENTER DESCRIPTION
EC NO: I2007-0193 2007/01/08
DRWN:SURENG 2007/01/08
CHK:DKPRASAD 2007/01/09
APPR:KPRASAD
DESCRIPTION

REV: A

QUALITY SYMBOLS
▼=0
▽=0

GENERAL TOLERANCES (UNLESS SPECIFIED)

	mm	INCH
4 PLACES	± ---	± ---
3 PLACES	± 0.05	± ---
2 PLACES	± 0.1	± ---
1 PLACE	± 0.15	± ---
ANGULAR ± 2 °		

DRAFT WHERE APPLICABLE MUST REMAIN WITHIN DIMENSIONS

DIMENSION STYLE: MM ONLY
SCALE: 2:1
DESIGN UNITS: METRIC
THIRD ANGLE PROJECTION

		DATE
DRAWN BY	SSUDHIR	2000/09/22
CHECKED BY	G.L	2000/09/22
APPROVED BY	G.L	2000/09/22

TITLE: ASSEMBLY DIN 41612 C FEMALE 96 POS 1.0MM PCB DIA

MOLEX INCORPORATED

MATERIAL NO. 85042-0001
DOCUMENT NO. SD-85042-0001
SHEET NO. 1 OF 1

SIZE A1

THIS DRAWING CONTAINS INFORMATION THAT IS PROPRIETARY TO MOLEX INCORPORATED AND SHOULD NOT BE USED WITHOUT WRITTEN PERMISSION

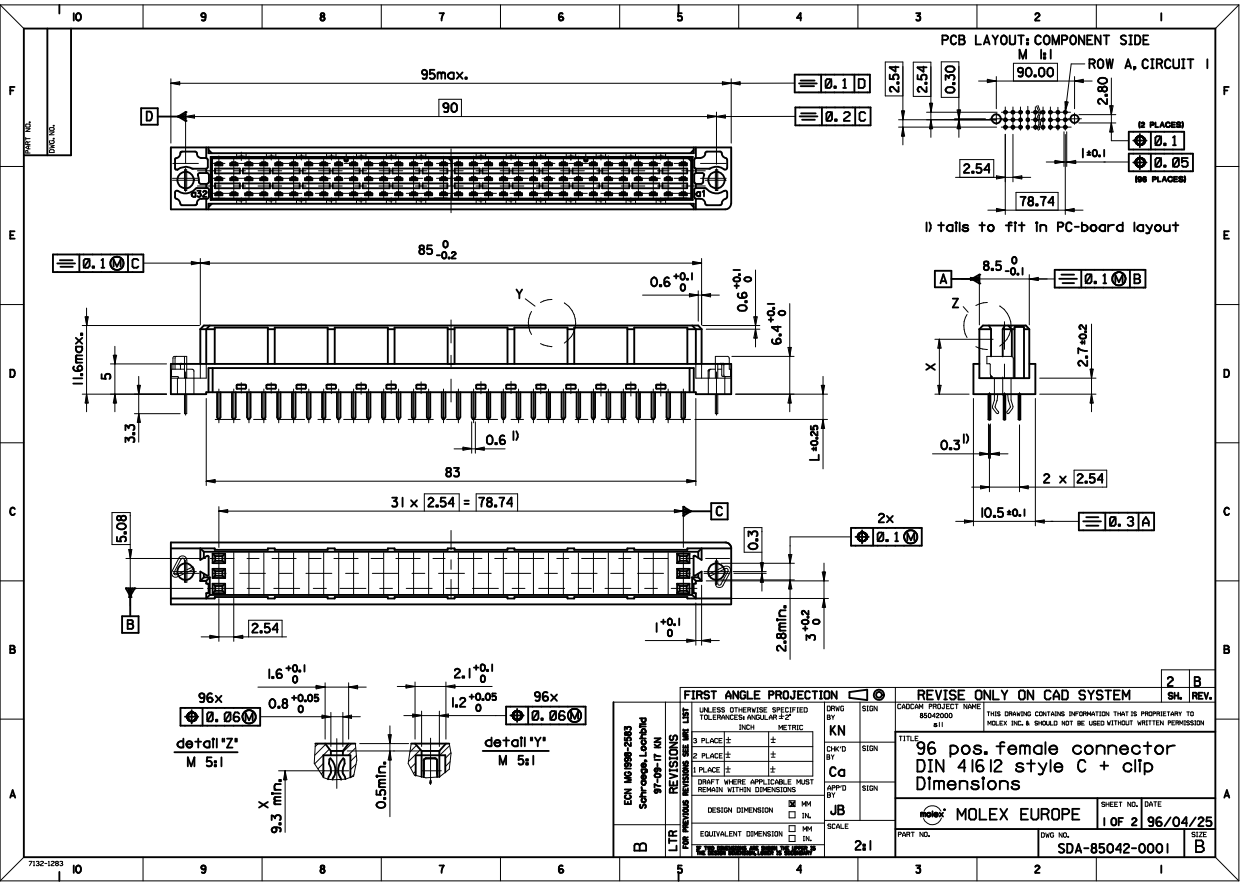

SHT. 1 OF	MR1-

MODIFICATION RECORD INDEX

ECN	ISS.	DATE	INIT.	SHTS. AFFECTED	DESCRIPTION OF MOD.
2213	A	96.04.26	KN	1 / 2	first release
2253	A1	96.10.01	KN	1	Kontur ueber Rastfenster
2583	B	97.09.17	KN	1	Schraege im Flanschbereich Lochbild

MOLEX EUROPE — REVISE ONLY ON CAD SYSTEM

THIS DRAWING CONTAINS INFORMATION THAT IS PROPRIETARY TO MOLEX INC. & SHOULD NOT BE USED WITHOUT WRITTEN PERMISSION — MF0028 — CADCAM FILENAME — ISSUE

LEVEL CHART

1	17	33	49
2	18	34	50
3	19	35	51 LEVEL INDEX
4	20	36	52 RESERVED
5	21	37	53 RESERVED
6	22	38	54 Inspection Balloons
7	23	39	55 DIMENSIONS
8	24	40	56 TABLES/CHARTS
9	25	41	57 REVISION TEXT & MRI
10	26	42	58 Notes/text - English
11	27	43	59 Bill of materials
12	28	44	60 notes/text - german
13	29	45	61
14	30	46	62 notes/text - french
15	31	47	63 RESERVED
16	32	48	

VIEW ON MATING SIDE

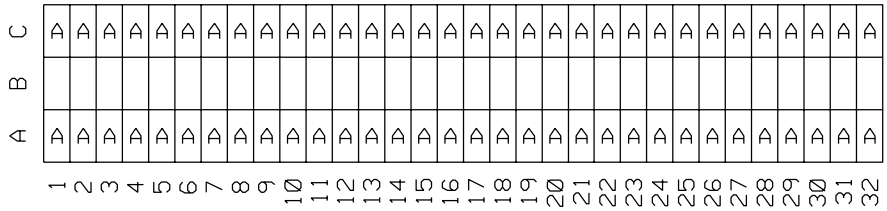

A = 64 STANDARD CONTACTS L=4,5

Marking	Standard
Performance level	G2/0 = Contact area level2 / Termination tin
Flux proof	no
Fixing clip	no
Dimensions	SDA-85042-0001 sht.1
TechnicalData	PS-85042-0001

A	G2/0	a1-32 c1-32
Contact symbol	Perform. level	Contact position number

first release
see ECN No. 2154

A

REVISIONS

LTR

FOR PREVIOUS REVISIONS SEE MRI LIST

UNLESS OTHERWISE SPECIFIED TOLERANCES: ANGULAR ±2°

	INCH	METRIC
3 PLACE	± .	±
2 PLACE	± .	±
1 PLACE	± .	±

DRAFT WHERE APPLICABLE MUST REMAIN WITHIN DIMENSIONS

DESIGN DIMENSION ☐ MM ☐ IN.

EQUIVALENT DIMENSION ☐ MM ☐ IN.

IF TWO DIMENSIONS ARE SHOWN THE UPPER IS THE DESIGN DIMENSION, LOWER IS SECONDARY

DRWG BY	Ca	SIGN
CHK'D BY	KN	SIGN
APP'D BY		SIGN
SCALE		

REVISE ONLY ON CAD SYSTEM | SH. | REV.

CADCAM PROJECT NAME
s8504201
s71

THIS DRAWING CONTAINS INFORMATION THAT IS PROPRIETARY TO MOLEX INC. & SHOULD NOT BE USED WITHOUT WRITTEN PERMISSION

TITLE
96 pos. female connector
acc. DIN 41612 style C
contacts arrangement

molex® MOLEX EUROPE

SHEET NO. 1 OF 1

DATE 96/05/24

PART NO. 85042-0177

DWG NO. SDA-85042-0177

SIZE A