REVISION			
REV.	DESCRIPTION	DATE	APPROVED
A	RoHS Compliancy	06-01-06	DP

THESE DRAWINGS ARE THE PROPERTY OF QUALTEK ELECTRONICS AND NOT TO BE REPRODUCED FOR OR COMMUNICATED TO A THIRD PARTY WITHOUT THE EXPRESS WRITTEN PERMISSION OF AN OFFICER OF QUALTEK ELECTRONICS.

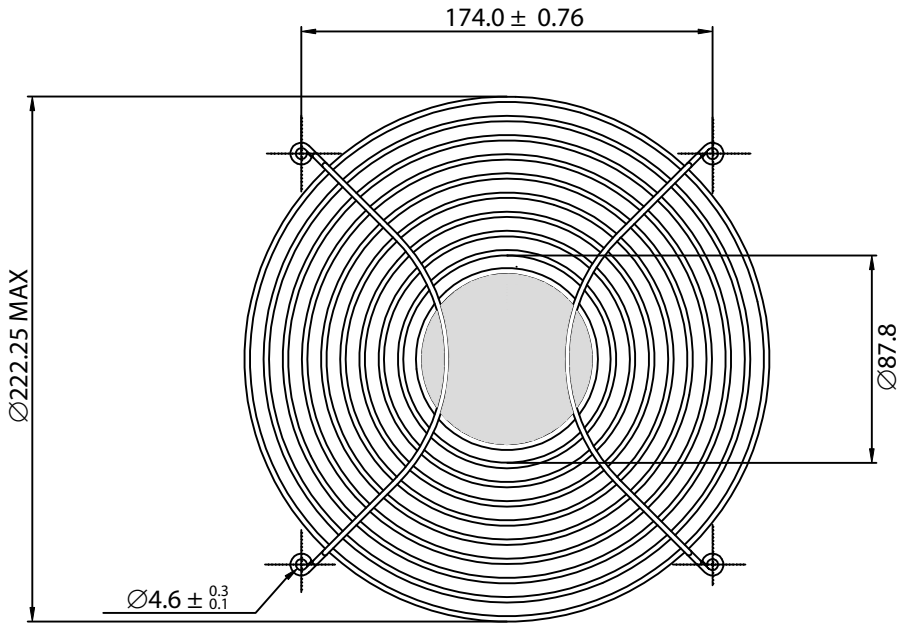

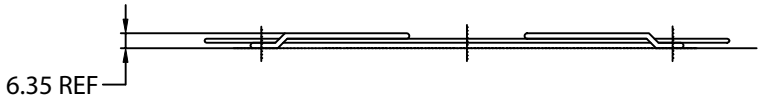

NOTES:

1. MATERIAL: C1008 BRIGHT BASIC WIRE
2. FINISH: BRIGHT NICKEL CHROME PLATING
3. 0.35 ± 0.05 DEPTH OF SERRATIONS ON WIRE
4. RING: ∅2.3 ± 0.1mm
   RIB: ∅2.3 ± 0.1mm
   CENTER DISC: = Ø76.8 T=0.8
5. GENERAL TOLERANCE UNLESS NOTED IS ± 0.5mm
6. RoHS COMPLIANT

CONTROLLED

Dim range (mm)	Tolerance +/- (mm)
0-5	0.1
5-16	0.15
16-64	0.2
64-250	0.4
250-1000	0.5
1000-1500	1.0

Qualtek Electronics Corp.
FAN-S DIVISION

Part Number: 08127 RoHS Compliant

Description: WIRE FORM FAN GUARD (254mm)

	UNIT: mm	REV: A
Drawn / Date	Checked / Date	Approved / Date
B. ZHANG 12-03-04	12-03-04	JJH / 12-03-04