INTEGRATED CONNECTOR MODULES

10/100Base-TX belStack™

BM01814

- 12-port shielded RJ-45 connector with integrated 10/100 magnetics
- Compatible with a variety of 10/100 transceiver ICs
- Operating temperature 0° to +70° C
- Storage temperature -40° to +85° C
- Complies with IEEE standards and all 10/100 Ethernet specifications including 350µH with 8mA DC bias
- Highly integrated design conserves valuable board space
- Minimum interwinding breakdown voltage of 1500 Vrms
- Adaptable, modular design provides higher reliability

ELECTRICAL SPECIFICATIONS AT 25° C

Part Number	Insertion Loss dB max	Return Loss dB min			Common to Differential Mode Rejection dB min	Common to Common Mode Rejection dB min	Crosstalk dB min
	1MHz to 100MHz	1MHz to 30MHz	30MHz to 60MHz	60MHz to 80MHz	100kHz to 100MHz		100kHz to 100MHz
0811-2X6T-18	-1.1	-18	18 - 20 log (f/30MHz)	-12	-40	-30	-35
0811-2X6T-30	-1.1	-18	18 - 20 log (f/30MHz)	-12	-40	-30	-35

Available Options

- Various transformer turns ratios
- Various high voltage capacitor values

©2001 Bel Fuse Inc. Specifications subject to change without notice. 08.01

SCHEMATIC

0811-2X6T-18

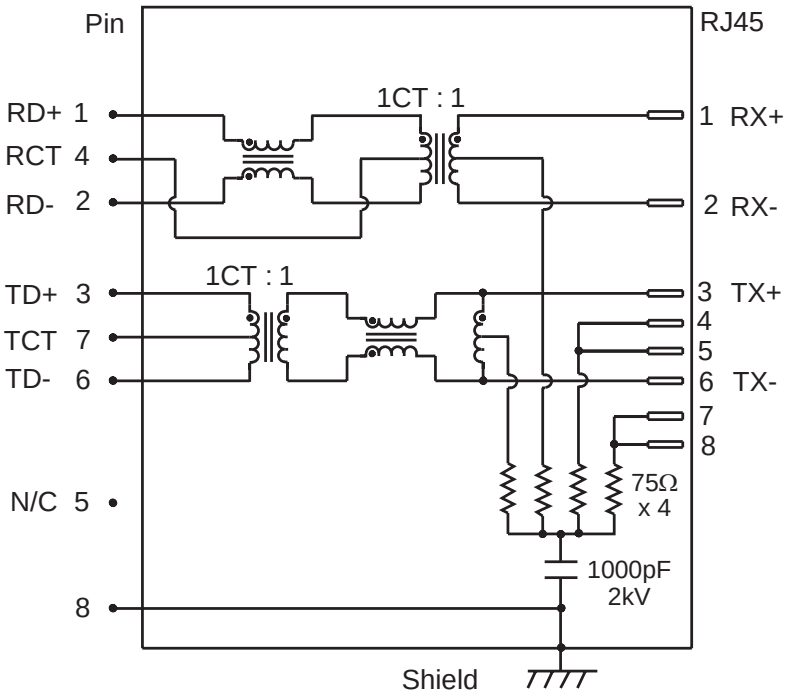

0811-2X6T-30

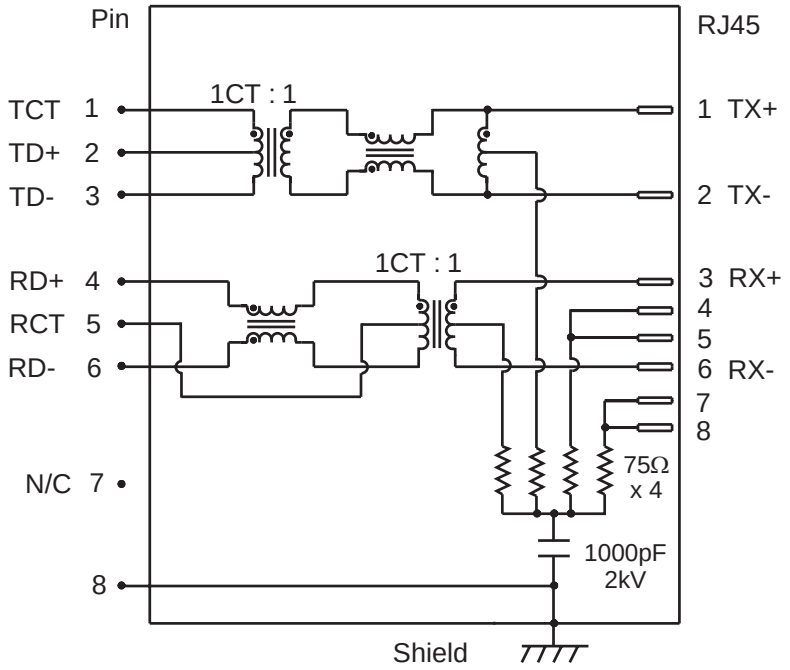

©2001 Bel Fuse Inc. Specifications subject to change without notice. 08.01

MECHANICAL

0811-2X6T-18
0811-2X6T-30

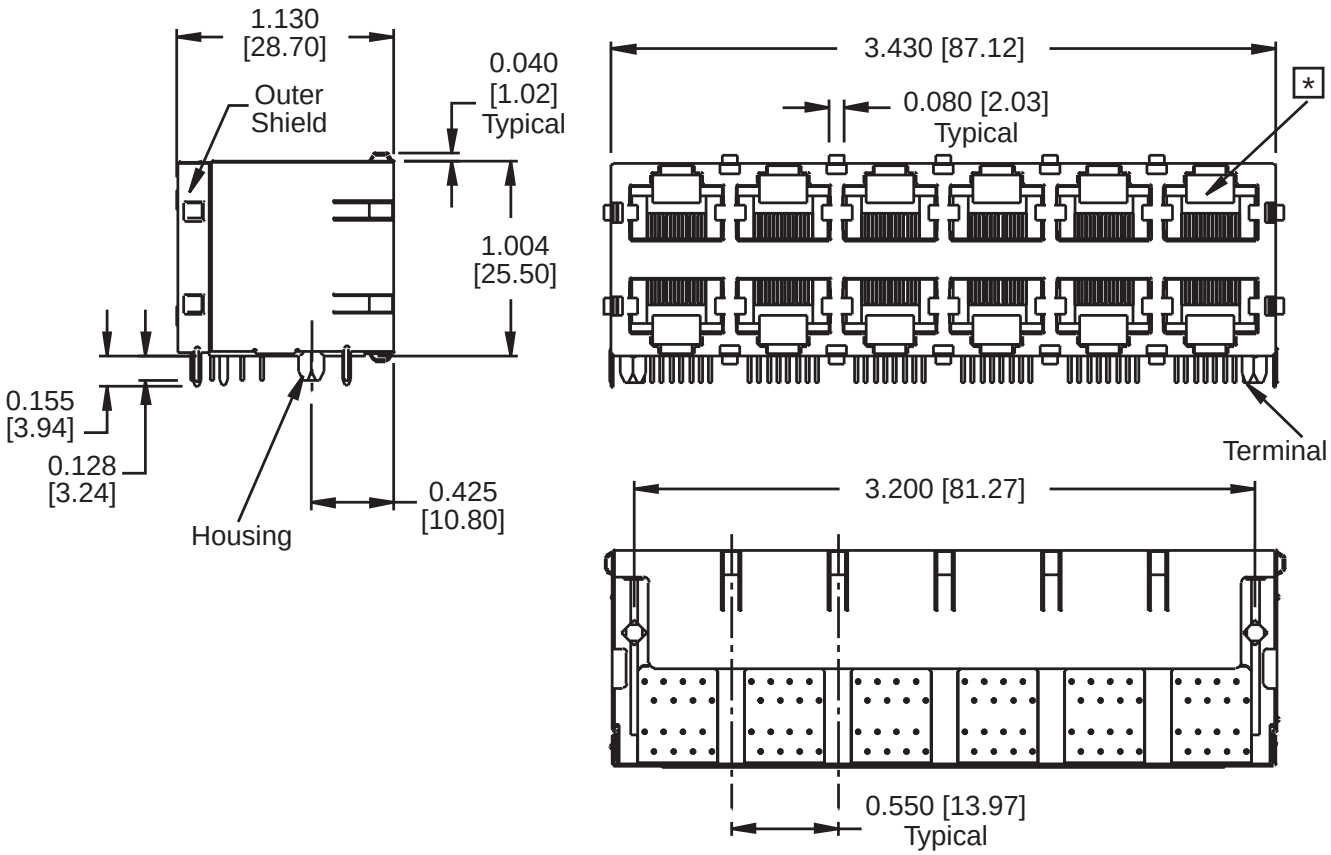

Dimensions are in inches [millimeters].
Standard dimension tolerance is ±0.010 [0.25] unless otherwise noted.

Notes

Plastic Housing	Thermoplastic, flammability rating UL 94V-0
Contacts	50 micro-inch hard gold plating
Pins	Tin-coated copper wire, DIA 0.018" [0.46]
Solderability	Per MIL Std. 202, Method 208
Metal Shield	Nickel plated copper alloy

*Jack cavity conforms to FCC rules and regulations, part 68, subpart F.

©2001 Bel Fuse Inc. Specifications subject to change without notice. 08.01

PAD LAYOUT

0811-2X6T-18
0811-2X6T-30

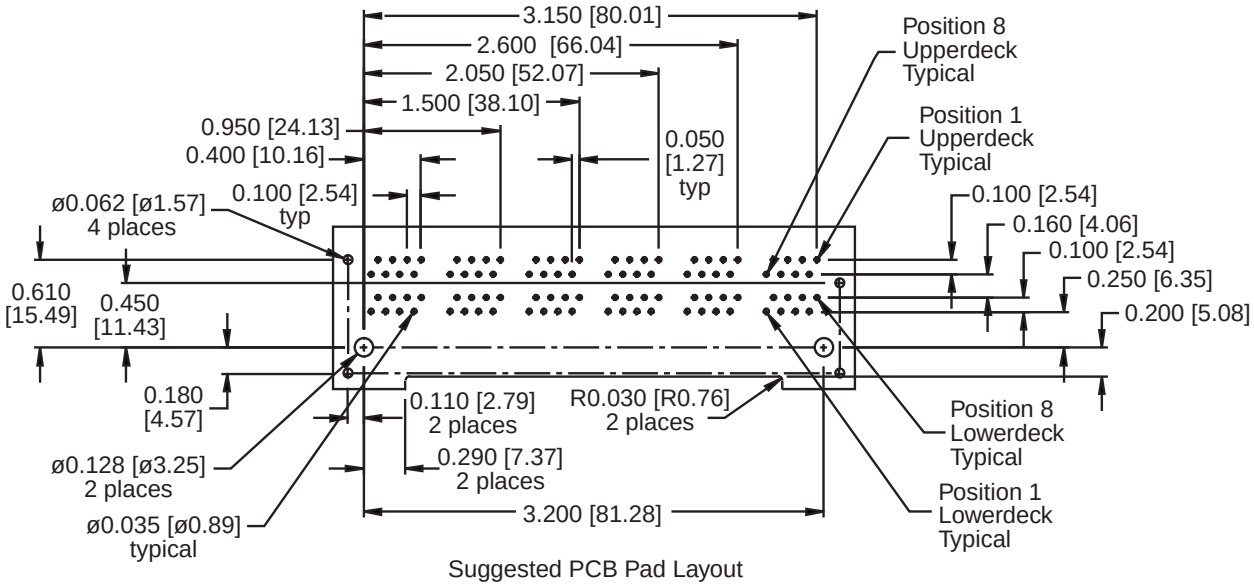

Suggested PCB Pad Layout
Component Side View

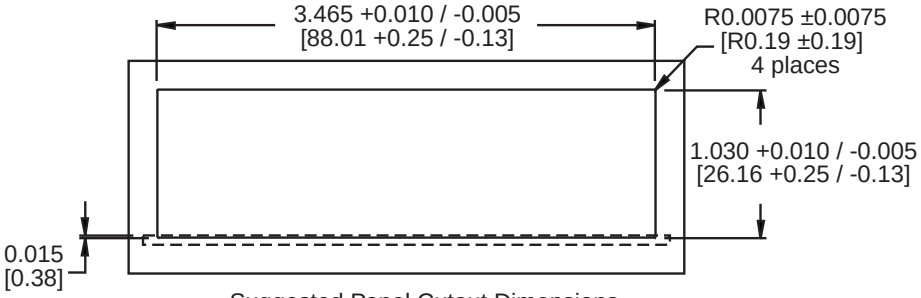

Suggested Panel Cutout Dimensions

©2001 Bel Fuse Inc. Specifications subject to change without notice. 08.01

CORPORATE

Bel Fuse Inc.
206 Van Vorst Street
Jersey City, NJ 07302
Tel 201-432-0463
Fax 201-432-9542
www.belfuse.com

FAR EAST

Bel Fuse Ltd.
8F / 8 Luk Hop Street
San Po Kong
Kowloon, Hong Kong
Tel 852-2328-5515
Fax 852-2352-3706
www.belfuse.com

EUROPE

Bel Fuse Europe Ltd.
Preston Technology Management Centre
Marsh Lane, Suite G7, Preston
Lancashire, PR1 8UD, U.K.
Tel 44-1772-556601
Fax 44-1772-888366
www.belfuse.com