Extract from the online catalog

ZFKKDS 1,5C-5,0

Order No.: 1889301

The illustration shows a 15-position version

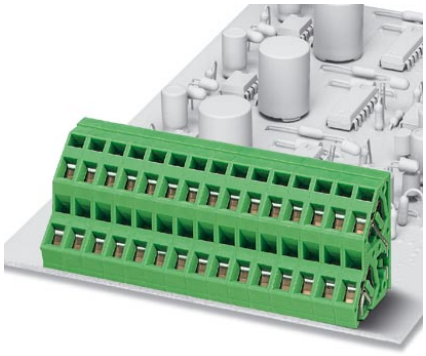

http://eshop.phoenixcontact.de/phoenix/treeViewClick.do?UID=1889301

PC terminal block, Nominal current: 16 A, Nom. voltage: 250 V, Pitch: 5 mm, Number of positions: 1, Type of connection: Spring-cage conn., Mounting: Soldering, Conductor/PCB connection direction: 45 °, Color: green, The article can be aligned to create different nos. of positions!

Product notes

WEEE/RoHS-compliant since: 01/01/2003

http://www.download.phoenixcontact.com
Please note that the data given here has been taken from the online catalog. For comprehensive information and data, please refer to the user documentation. The General Terms and Conditions of Use apply to Internet downloads.

Commercial data

GTIN (EAN)	4 017918 167967
sales group	E063
Pack	50 pcs.
Customs tariff	85369010
Catalog page information	Page 99 (CC-2009)

Technical data

Dimensions / positions

Length	21 mm
Pitch	5 mm
Number of positions	1
Pin dimensions	0,7 x 0,7 mm
Hole diameter	1.1 mm

Technical data

Range of articles	ZFKKDS(A) 1,5C
Insulating material group	I
Rated surge voltage (III/3)	4 kV
Rated surge voltage (III/2)	4 kV
Rated surge voltage (II/2)	4 kV
Rated voltage (III/3)	250 V
Rated voltage (III/2)	400 V
Rated voltage (II/2)	630 V
Connection in acc. with standard	EN-VDE
Nominal current I_N	16 A
Nominal cross section	1.5 mm²
Maximum load current	16 A (with 2.5 mm^2 conductor cross section)
Insulating material	PA
Inflammability class acc. to UL 94	V0
Internal cylindrical gage	A1
Stripping length	7 mm
Nominal voltage, UL/CUL Use Group B	250 V
Nominal current, UL/CUL Use Group B	10 A
Nominal voltage, UL/CUL Use Group D	300 V
Nominal current, UL/CUL Use Group D	10 A

Connection data

Conductor cross section solid min.	0.2 mm²
Conductor cross section solid max.	2.5 mm²
Conductor cross section stranded min.	0.2 mm²
Conductor cross section stranded max.	1.5 mm²
Conductor cross section stranded, with ferrule without plastic sleeve min.	0.25 mm²
Conductor cross section stranded, with ferrule without plastic sleeve max.	1.5 mm²
Conductor cross section stranded, with ferrule with plastic sleeve min.	0.25 mm²
Conductor cross section stranded, with ferrule with plastic sleeve max.	1.5 mm²
Conductor cross section AWG/kcmil min.	24
Conductor cross section AWG/kcmil max	14

Minimum AWG according to UL/CUL	26
Maximum AWG according to UL/CUL	12

Certificates / Approvals

Certification	CUL, UL

Accessories

Item	Designation	Description
Marking		
0804183	SK 5/3,8:FORTL.ZAHLEN	Marker card, printed horizontally, self-adhesive, 12 identical decades marked 1-10, 11-20 etc. up to 91-(99)100, sufficient for 120 terminal blocks
Tools		
1204517	SZF 1-0,6X3,5	Actuation tool, for ST terminal blocks, also suitable for use as a bladed screwdriver, size: 0.6 x 3.5 x 100 mm, 2-component grip, with non-slip grip

Additional products

Item	Designation	Description
General		
1889275	ZFKKDSA 1,5C-5,0 L	PC terminal block, Nominal current: 16 A, Nom. voltage: 250 V, Pitch: 5 mm, Number of positions: 1, Type of connection: Spring-cage conn., Mounting: Soldering, Conductor/PCB connection direction: 45 °, Color: green, The article can be aligned to create different nos. of positions!
1889288	ZFKKDSA 1,5C-6,0 R	PC terminal block, Nominal current: 16 A, Nom. voltage: 250 V, Pitch: 5 mm, Number of positions: 1, Type of connection: Spring-cage conn., Mounting: Soldering, Conductor/PCB connection direction: 45 °, Color: green, The article can be aligned to create different nos. of positions!

Diagrams/Drawings

Drilling plan/solder pad geometry

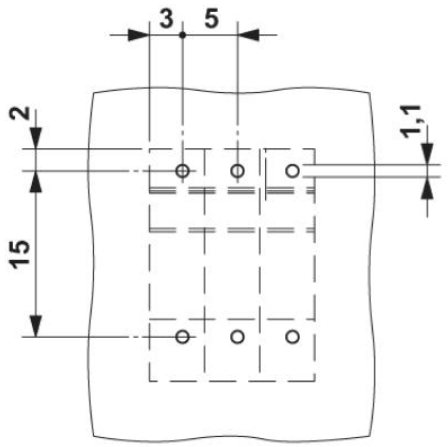

Diagram

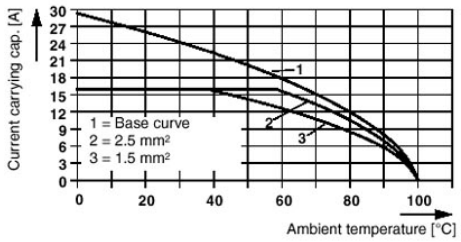

Dimensioned drawing

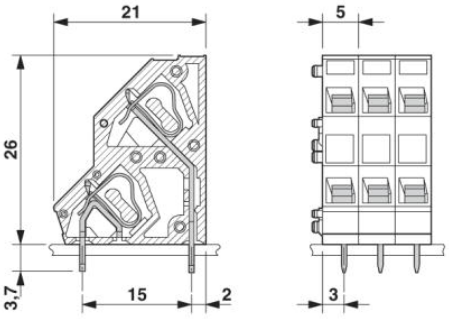

Address

PHOENIX CONTACT Deutschland GmbH
Flachsmarktstr. 8
32825 Blomberg,Germany
Phone +49 5235 3 12000
Fax +49 5235 3 41200
http://www.phoenixcontact.de

© 2011 Phoenix Contact
Technical modifications reserved;