Extract from the online catalog

MKDS 3/ 2

Order No.: 1711026



http://eshop.phoenixcontact.de/phoenix/treeViewClick.do?UID=1711026

PC terminal block, Nominal current: 24 A, Nom. voltage: 250 V, Pitch: 5 mm, Number of positions: 2, Type of connection: Screw connection, Assembly: Soldering, Conductor/PCB connection direction: 0 °, Color: green, The article can be aligned to create different nos. of positions!

Commercial data	
EAN	4017918023652
Pack	50 pcs.
Customs tariff	85369010
Weight/Piece	0.00412 KG
Catalog page information	Page 73 (CC-2009)

Product notes

WEEE/RoHS-compliant since: 01/01/2003

http://www.download.phoenixcontact.com
Please note that the data given here has been taken from the online catalog. For comprehensive information and data, please refer to the user documentation. The General Terms and Conditions of Use apply to Internet downloads.

Technical data

Dimensions / positions

Length	11.2 mm
Height	18 mm
Pitch	5 mm

Dimension a	5 mm
Number of positions	2
Pin dimensions	0,9 x 0,9 mm
Pin spacing	5 mm
Hole diameter	1.3 mm
Screw thread	M3
Tightening torque, min	0.5 Nm
Tightening torque max	0.6 Nm

Technical data

Insulating material group	I
Rated surge voltage (III/3)	4 kV
Rated surge voltage (III/2)	4 kV
Rated surge voltage (II/2)	4 kV
Rated voltage (III/2)	400 V
Rated voltage (II/2)	630 V
Connection in acc. with standard	EN-VDE
Nominal current I_N	24 A
Nominal voltage U_N	250 V
Nominal cross section	2.5 mm²
Maximum load current	28 A (with 4 mm² conductor cross section)
Insulating material	PA
Inflammability class acc. to UL 94	V0
Internal cylindrical gage	A3
Stripping length	8 mm

Connection data

Conductor cross section solid min.	0.2 mm²
Conductor cross section solid max.	4 mm²
Conductor cross section stranded min.	0.2 mm²
Conductor cross section stranded max.	2.5 mm²
Conductor cross section stranded, with ferrule without plastic sleeve min.	0.25 mm²
Conductor cross section stranded, with ferrule without plastic sleeve max.	2.5 mm²
Conductor cross section stranded, with ferrule with plastic sleeve min.	0.25 mm²

Conductor cross section stranded, with ferrule with plastic sleeve max.	2.5 mm²
Conductor cross section AWG/kcmil min.	24
Conductor cross section AWG/kcmil max	12
2 conductors with same cross section, solid min.	0.2 mm²
2 conductors with same cross section, solid max.	1.5 mm²
2 conductors with same cross section, stranded min.	0.2 mm²
2 conductors with same cross section, stranded max.	1.5 mm²
2 conductors with same cross section, stranded, ferrules without plastic sleeve, min.	0.25 mm²
2 conductors with same cross section, stranded, ferrules without plastic sleeve, max.	0.75 mm²
2 conductors with same cross section, stranded, TWIN ferrules with plastic sleeve, min.	0.5 mm²
2 conductors with same cross section, stranded, TWIN ferrules with plastic sleeve, max.	1.5 mm²

Certificates / Approvals

Certification	CCA, CSA, CUL, GL, GOST, SEV, UL

CSA

Nominal voltage U_N	300 V
Nominal current I_N	10 A
AWG/kcmil	28-12

CUL

Nominal voltage U_N	300 V
Nominal current I_N	10 A
AWG/kcmil	30-12

UL

Nominal voltage U_N	300 V
Nominal current I_N	10 A
AWG/kcmil	30-12

Accessories

Item	Designation	Description
Assembly		
1703047	RZ 1,25-MKDS 3	Pitch spacer, for adjusting the pitches between MKDS and GMKDS terminal blocks in mixed rows, 1.25 mm thick
General		
1733169	EBP 2- 5	Insertion bridge, fully insulated, for plug connectors with 5.0 or 5.08 mm pitch, no. of positions: 2
Marking		
1051993	B-STIFT	Marker pen, for manual labeling of unprinted Zack strips, smear-proof and waterproof, line thickness 0.5 mm
0804183	SK 5/3,8:FORTL.ZAHLEN	Marker card, printed horizontally, self-adhesive, 12 identical decades marked 1-10, 11-20 etc. up to 91-(99)100, sufficient for 120 terminal blocks
0805072	SK 5/3,8:SO	Marker card, special printing, self-adhesive, labeled acc. to customer requirements, 12 identical marker strips per card, max. 25-position labeling per strip, color: white
0805409	SK 5/3,8:UNBEDRUCKT	Marker cards, unprinted, with pitch divisions, self-adhesive, 10-section marker strips, 12 strips per card, can be labeled with the M-PEN
0803906	SK U/3,8 WH:UNBEDRUCKT	Unprinted marker cards, DIN A4 format, pitch as desired, self-adhesive, with 40 stamped marker strips, 185 mm strip length, can be labeled with the CMS system or manually with the M-PEN
Tools		
1205053	SZS 0,6X3,5	Screwdriver, bladed, matches all screw terminal blocks up to 4.0 mm² connection cross section, blade: 0.6 x 3.5 mm, without VDE approval

Diagrams/Drawings

Drilling plan/solder pad geometry

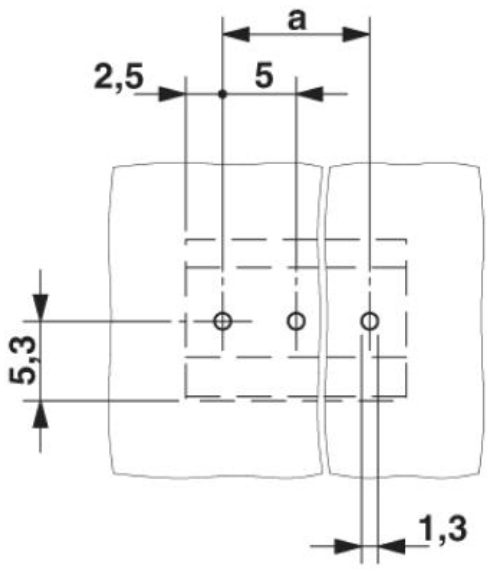

Diagram

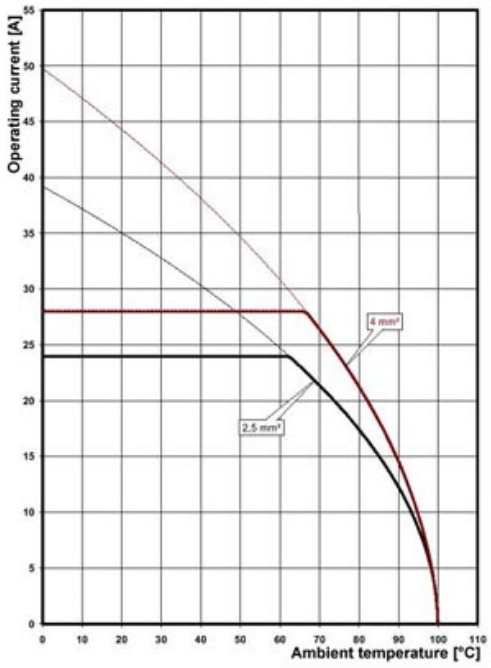

Dimensioned drawing

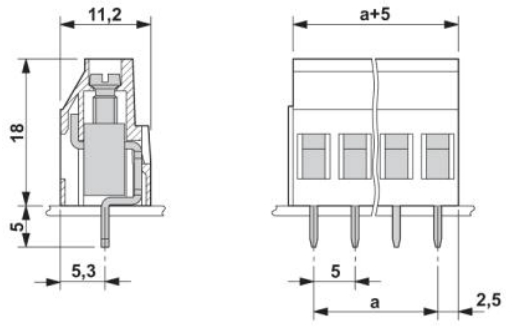

Address

PHOENIX CONTACT Deutschland GmbH
Flachsmarktstr. 8
32825 Blomberg,Germany
Phone +49 5235 3 12000
Fax +49 5235 3 41200
http://www.phoenixcontact.de

© 2010 Phoenix Contact
Technical modifications reserved;