POWERLINE MODULES

Low Power SIMPLE™ Embedded PowerPacket™ Modules

FEATURES

- All-in-one HomePlug™ 1.0 embedded modules based on Intellon's advanced INT5200 single-chip powerline solution
- Pin and function compatible with the previous generation INT51MX modules
- Integrates all components necessary to add HomePlug functionality to any embedded system at industry's lowest cost
- Compact vertical or right-angle mounting configuration using Intellon's SIMPLE PowerBus™ connector
- Configurable for optimum performance in six foot AC/DC corded or wallplug (zero feet) applications
- Operates from a single 3.3V supply
- Minimum footprint
- HomePlug 1.0 compliant
- Simplifies development cycle, assembly and test

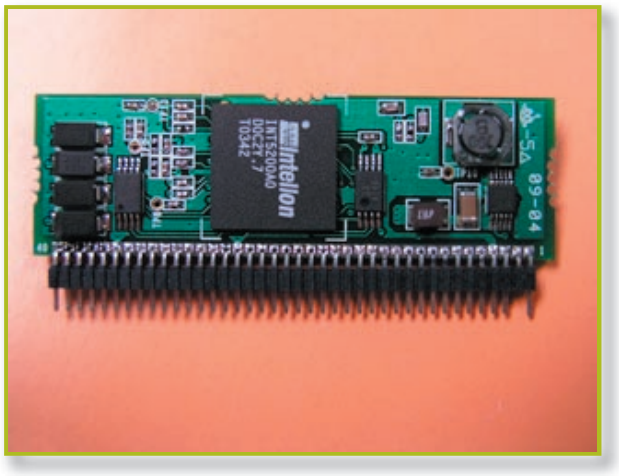

Part Number	Description
0804-5000-03	Vertical Mounting
0804-5000-04	Right Angle Mounting

Bel's 0804-5000-03 and 0804-5000-04 PowerPacket modules are the latest members of the Single Inline Module – Power Line Enabled (SIMPLE) family. Pin compatible with Bel's 79102xx-x series, these modules provide the same functionality in a smaller package offered at a lower price. Additionally, these modules provide lower power consumption and improved thermal dissipation due to the use of high efficiency switching regulator technology.

These modules are specifically designed to allow future Intellon ICs to be used without board redesign. As new baseband/ AFE ICs are introduced by Intellon, pin and function compatible SIMPLE modules can be used to provide improved functionality and/or reduced cost without requiring any redesign of products using SIMPLE modules.

Based on the industry leading Intellon single-chip PowerPacket transceiver, these modules integrate most of the components required in a HomePlug solution on a tiny single in-line package. This package can be easily connected into any existing embedded system via the proprietary SIMPLE PowerBus™ header instantly adding HomePlug functionality with virtually no PCB space and without the hassle of a system redesign.

Each module integrates the chip, crystal, EEPROM, discrete RX filter and DC regulators into one single device. The only external components required are the PLC coupler and transient protection on the AC side of the main power supply. The host interface for any of the modules can be configured to be MII PHY, GPSI PHY or MII Host/DTE.

The modules are truly the industry's most integrated and cost effective way of adding HomePlug 1.0 functionality to any embedded networking or consumer electronics product.

In Partnership with Intellon NO NEW WIRES.

POWERPACKET™

©2004 Bel Fuse Inc. Specifications subject to change without notice. 07.16.04

Bel Fuse Inc. 206 Van Vorst Street, Jersey City, NJ 07302 • Tel 201-432-0463 • Fax 201-432-9542 • www.belfuse.com

POWERLINE MODULES

Low Power SIMPLE™ Embedded PowerPacket™ Modules

BLOCK DIAGRAM

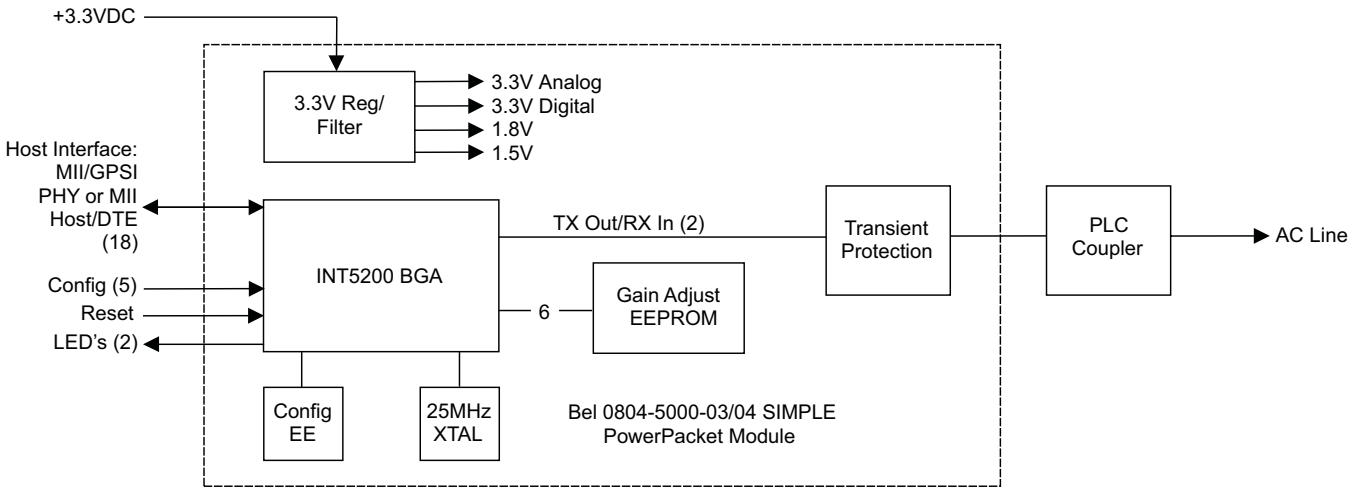

MECHANICAL
0804-5000-03 Vertical Mount

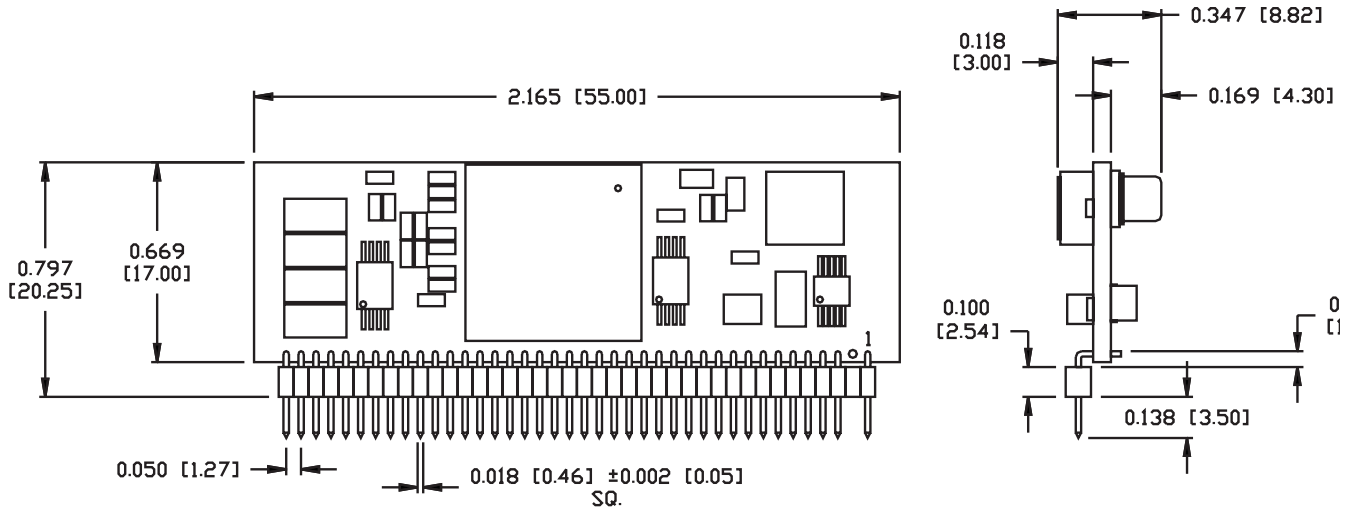

©2004 Bel Fuse Inc. Specifications subject to change without notice. 07.16.04

POWERLINE MODULES

Low Power SIMPLE™ Embedded PowerPacket™ Modules

MECHANICAL
0804-5000-04 Right Angle Mount

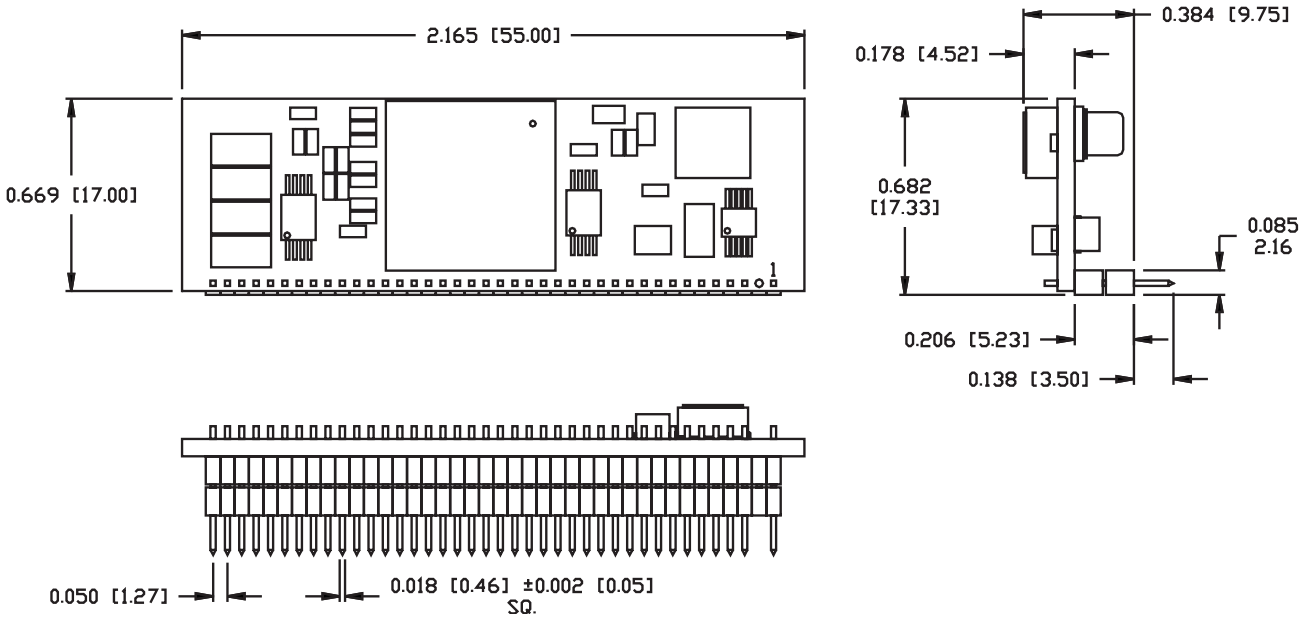

©2004 Bel Fuse Inc. Specifications subject to change without notice. 07.16.04
Intellon, PowerPacket, SIMPLE and SIMPLE PowerBus are registered trademarks of Intellon Corportation.

CORPORATE

Bel Fuse Inc.
206 Van Vorst Street
Jersey City, NJ 07302
Tel 201-432-0463
Fax 201-432-9542
www.belfuse.com

FAR EAST

Bel Fuse Ltd.
8F / 8 Luk Hop Street
San Po Kong
Kowloon, Hong Kong
Tel 852-2328-5515
Fax 852-2352-3706
www.belfuse.com

EUROPE

Bel Stewart Connector
45/46 Riverside
Medway City Estate
Rochester, Kent ME2 4DP U.K.
Tel 44-1634-722890
Fax 44-1634-716677
www.belfuse.com