08010300 DUAL POLE BATTERY DISCONNECT SWITCHES

250A • DPST • IP65 • M10 Studs



Description

Dual Pole Manual Battery Disconnect Switch features model with a removable handle with chain so it never gets lost or a model with a fixed handle with integrated Lock-Out Tag-Out for applications where required. The handle has a rubber gasket at the base to ensure proper sealing and some with three colors for quick identification.

Features/Benefits

- 250A continuous current rating
- Equipped with red, yellow and black rubber caps to mark differentiate between function or application
- Waterproof and dustproof to IP65
- Removable handle model keeps the actuator nearby with an attached chain to prevent loss during servicing
- Fixed handle model includes integrated Lock-Out Tag-Out
- 08010100 is cross-references to BOSCH 1342026002 and it is compatible with the locking bracket LS 11003

Specifications

Max Operating Voltage:	24V DC
Max Continuous Current:	250A
Intermittent Current:	2500A at 3 sec
Operating Temp:	-40°C to +85°C
Ingress Protection:	IP65
Contacts:	Silver-Plated Copper
Terminals:	M10 (zinc-plated steel)

Applications

- Heavy Truck
- Off-Road
- Emergency Vehicles
- Material Handling
- Mining
- Agricultural
- Marine
- Construction

Web Resources

Download 2D prints and additional technical resources at:
littelfuse.com/ManualBatterySwitches

Electrical Diagram

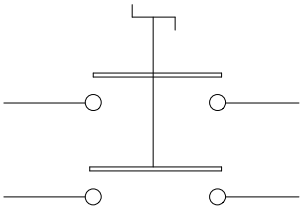

Ordering Information

PART NUMBERS		VOLTAGE	AMPERAGE	CIRCUITRY	MOUNTING	INGRESS	NOTES
BULK	BOXED						
08010300	08010300-BX	24V DC	250A	DPST	Flange Mount	IP65	Removable Handle w/ Chain Cap to cover when key is removed
08010360	08010360-BX	24V DC	250A	DPST	Flange Mount	IP65	Fixed Handle Integrated Lock-Out Tag-Out

© 2016 Littelfuse Commercial Vehicle Products

08010300 DUAL POLE BATTERY DISCONNECT SWITCHES

Dimensions in inches (millimeters)

08010300

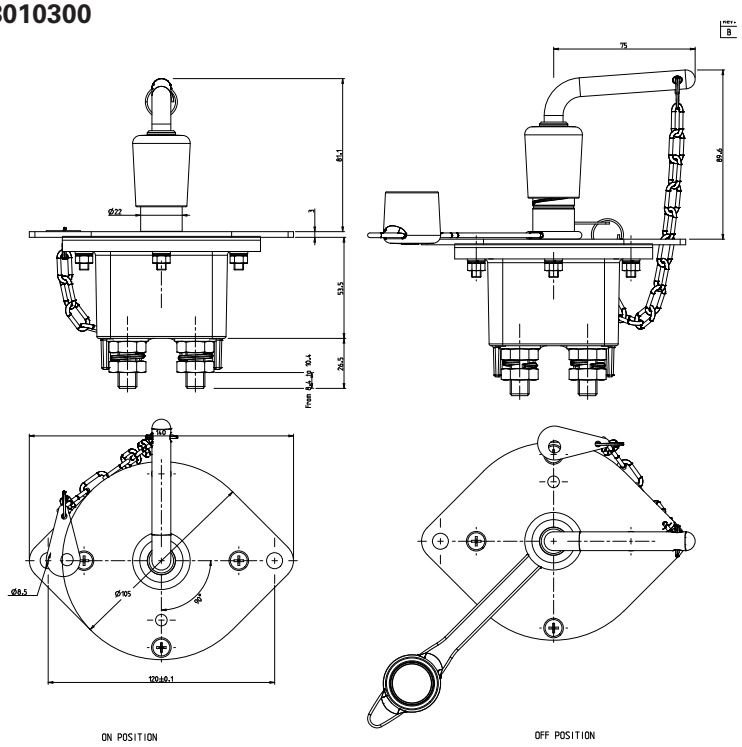

08010360

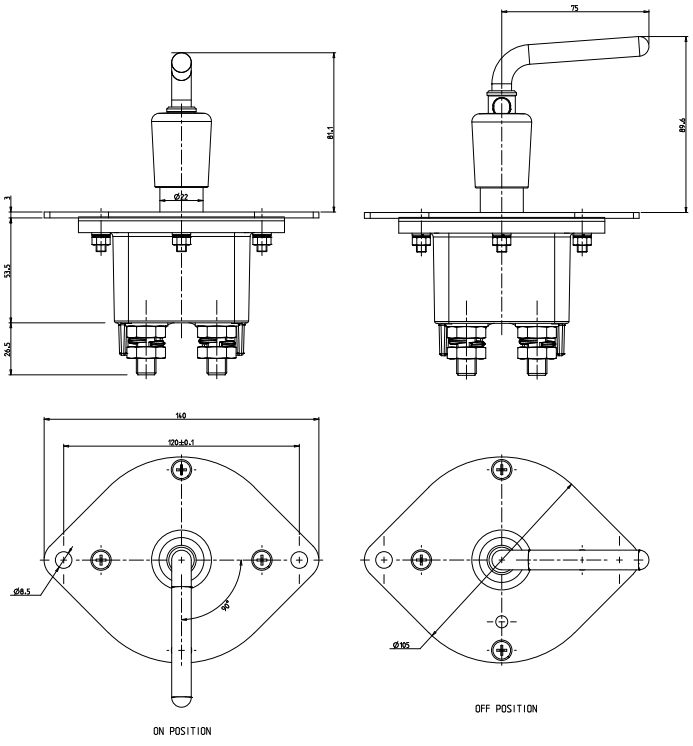

© 2016 Littelfuse Commercial Vehicle Products