This document was generated on 05/20/2010

PLEASE CHECK WWW.MOLEX.COM FOR LATEST PART INFORMATION

Part Number: 0791081017
Status: Active
Overview: milligrid
Description: 2.00mm (.079") Pitch Milli-Grid™ Flex-to-Board Vertical Receptacle Dual Row Through-Hole, 0.38µm (15µ") Gold (Au) Selective Plating, 36 Circuits, Leadfree

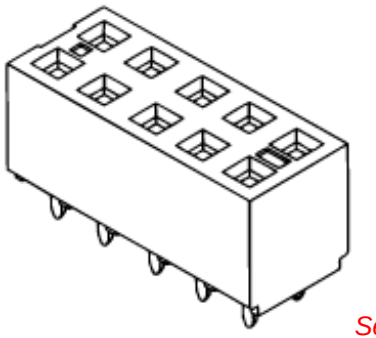

Series image - Reference only

Documents:

- 3D Model
- Drawing (PDF)
- Product Specification PS-79107 (PDF)
- RoHS Certificate of Compliance (PDF)

Agency Certification

CSA	LR19980
UL	E29179

General

Product Family	FFC/FPC Connectors
Series	79108
Overview	milligrid
Product Name	Milli-Grid™

Physical

Circuits (Loaded)	36
Color - Resin	Black
Contact Position	Top
Durability (mating cycles max)	50
Entry Angle	90° Angle
Flammability	94V-0
Material - Metal	Phosphor Bronze
Material - Plating Mating	Gold
Material - Plating Termination	Tin
Material - Resin	High Temperature Thermoplastic
Number of Rows	2
Orientation	Right Angle
PC Tail Length (in)	0.050 In
PC Tail Length (mm)	1.27 mm
PCB Locator	No
PCB Retention	None
PCB Thickness Recommended (in)	0.024 In
PCB Thickness Recommended (mm)	0.60 mm
Packaging Type	Tube
Pitch - Mating Interface (in)	0.079 In
Pitch - Mating Interface (mm)	2.00 mm
Plating min: Mating (µin)	15
Plating min: Mating (µm)	0.375
Plating min: Termination (µin)	75
Plating min: Termination (µm)	1.875
Polarized to PCB	No
Stackable	No
Surface Mount Compatible (SMC)	No
Temperature Range - Operating	-55°C to +105°C
Termination Interface: Style	Through Hole
Wire/Cable Type	FFC/FPC

Electrical

Current - Maximum per Contact	1A
Voltage - Maximum	125V

EU RoHS
ELV and RoHS Compliant
REACH SVHC
Not Reviewed
Halogen-Free Status
Not Reviewed

China RoHS

Need more information on product environmental compliance?

Email productcompliance@molex.com
For a multiple part number RoHS Certificate of Compliance, click here

Please visit the Contact Us section for any non-product compliance questions.

Search Parts in this Series
79108Series

Mates With
87833 , 87832 , 87831 , 87758 , 87759 , 87760

Solder Process Data

Lead-free Process Capability	Wave Capable (TH only)

Material Info

Reference - Drawing Numbers

Product Specification	PS-79107
Sales Drawing	SDA-79108-****

This document was generated on 05/20/2010

PLEASE CHECK WWW.MOLEX.COM FOR LATEST PART INFORMATION

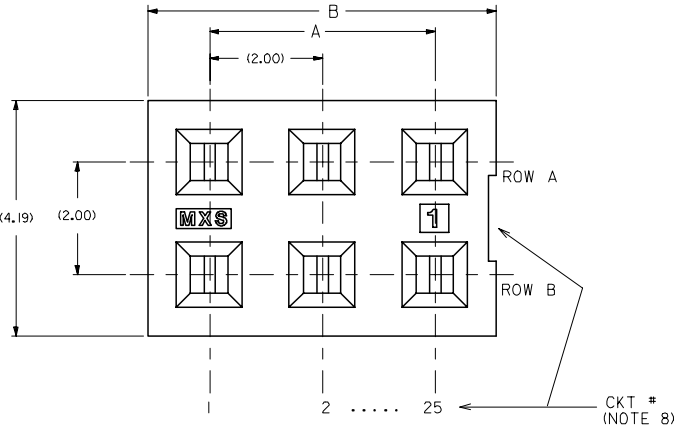

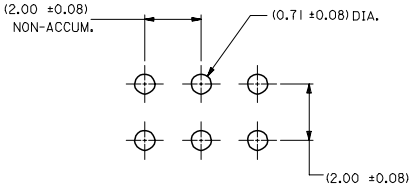

RECOMMENDED P.C. BOARD HOLE LAYOUT
SCALE - 10:1

NOTES:

1 - HOUSING MATERIAL: GLASS FILLED LCP. COLOR: BLACK.
2 - TERMINAL MATERIAL: PHOSPHOR BRONZE
3 - SEE SHEET 2 FOR CIRCUIT SIZE, PART NUMBERS AND OVER-ALL DIMENSIONS.
4 - FOR ILLUSTRATION, 6 CIRCUIT ASSEMBLY SHOWN.
5 - REFER TO PRODUCT SPECIFICATION PS-79107.
6 - PACKAGING PER PK-70873-0180.
7 - SEE SHEET 3 FOR VOIDED ASSEMBLIES.
8 - CKTS. NUMBERED FROM LEFT TO RIGHT WHEN PART IS VIEWED FROM TOP WITH RECESS ON RIGHT AS SHOWN.

PLATING OPTION :

(4) 0.76µm MIN. GOLD PLATE IN SELECTED AREA AND 1.91µm MIN. TIN IN SELECTED AREA OVER 1.27µm MIN. NICKEL OVER-ALL

(5) 0.38µm MIN. GOLD PLATE IN SELECTED AREA AND 1.91µm MIN. TIN IN SELECTED AREA OVER 1.27µm MIN. NICKEL OVER-ALL

(6) 0.13µm MIN. GOLD PLATE IN SELECTED AREA AND 1.91µm MIN. TIN IN SELECTED AREA OVER 1.27µm MIN. NICKEL OVER-ALL

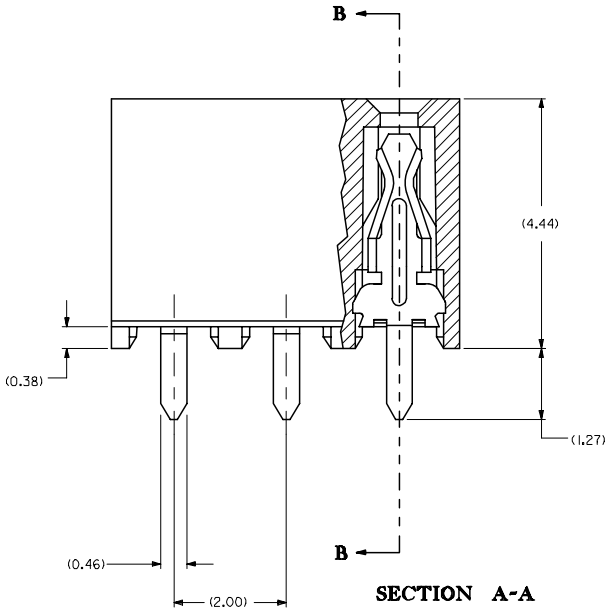

SECTION A-A

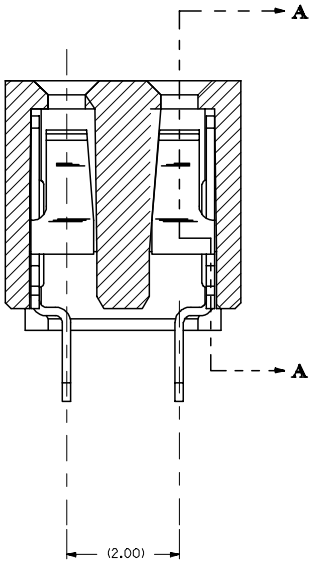

SECTION B-B

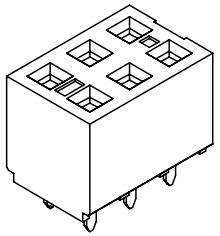

REVISE PDR#S1436	2006/12/06
EC NO: S2007-0532	2006/12/07
DRWN:KFLIM	2006/12/07
CHKD:MLONG	
APPR:SKTOH	
DESCRIPTION	
REV	
E2	

QUALITY SYMBOLS
▼=0
▽C=0

GENERAL TOLERANCES (UNLESS SPECIFIED)

	mm	INCH
4 PLACES	± ---	± ---
3 PLACES	± 0.10	± ---
2 PLACES	± 0.15	± ---
1 PLACE	± ---	± ---
ANGULAR ±1/2°		

DRAFT WHERE APPLICABLE MUST REMAIN WITHIN DIMENSIONS

DIMENSION STYLE	MM ONLY
SCALE	NTS
DESIGN UNITS	METRIC
	THIRD ANGLE PROJECTION
DRAWN BY	AAB
DATE	1998/05/15
CHECKED BY	MJM
DATE	1998/05/15
APPROVED BY	WAZ
DATE	1998/05/15
TITLE	2MM DUAL ROW, FFC VERTICAL RECEPTACLE
	MOLEX INCORPORATED
MATERIAL NO.	SEE TABLE
DOCUMENT NO.	SDA-79108-****
SHEET NO.	1 OF 4
SIZE	A3

THIS DRAWING CONTAINS INFORMATION THAT IS PROPRIETARY TO MOLEX INCORPORATED AND SHOULD NOT BE USED WITHOUT WRITTEN PERMISSION

CKT. SIZE	DIM. "A"	DIM. "B"	PLATING OPTION 5		PLATING OPTION 4		PLATING OPTION 6	
			EDP NO.	ENG. NO.	EDP NO.	ENG. NO.	EDP NO.	ENG. NO.
04	(2.00)	(4.19)	791081001	79108-1001	791081051	79108-1051	NOT TOOLED	79108-1101
06	(4.00)	(6.19)	791081002	79108-1002	791081052	79108-1052		79108-1102
08	(6.00)	(8.19)	791081003	79108-1003	791081053	79108-1053		79108-1103
10	(8.00)	(10.19)	791081004	79108-1004	791081054	79108-1054		79108-1104
12	(10.00)	(12.19)	791081005	79108-1005	791081055	79108-1055		79108-1105
14	(12.00)	(14.19)	791081006	79108-1006	791081056	79108-1056		79108-1106
16	(14.00)	(16.19)	791081007	79108-1007	791081057	79108-1057		79108-1107
18	(16.00)	(18.19)	791081008	79108-1008	791081058	79108-1058		79108-1108
20	(18.00)	(20.19)	791081009	79108-1009	791081059	79108-1059		79108-1109
22	(20.00)	(22.19)	791081010	79108-1010	791081060	79108-1060		79108-1110
24	(22.00)	(24.19)	791081011	79108-1011	791081061	79108-1061		79108-1111
26	(24.00)	(26.19)	791081012	79108-1012	791081062	79108-1062		79108-1112
28	(26.00)	(28.19)	791081013	79108-1013	791081063	79108-1063		79108-1113
30	(28.00)	(30.19)	791081014	79108-1014	791081064	79108-1064		79108-1114
32	(30.00)	(32.19)	791081015	79108-1015	791081065	79108-1065		79108-1115
34	(32.00)	(34.19)	791081016	79108-1016	791081066	79108-1066		79108-1116
36	(34.00)	(36.19)	791081017	79108-1017	791081067	79108-1067		79108-1117
38	(36.00)	(38.19)	791081018	79108-1018	791081068	79108-1068		79108-1118
40	(38.00)	(40.19)	791081019	79108-1019	791081069	79108-1069		79108-1119
42	(40.00)	(42.19)	791081020	79108-1020	791081070	79108-1070		79108-1120
44	(42.00)	(44.19)	791081021	79108-1021	791081071	79108-1071		79108-1121
46	(44.00)	(46.19)	791081022	79108-1022	791081072	79108-1072		79108-1122
48	(46.00)	(48.19)	791081023	79108-1023	791081073	79108-1073		79108-1123
50	(48.00)	(50.19)	791081024	79108-1024	791081074	79108-1074		79108-1124

REVISE PDR#S1436 2006/12/06
EC NO: S2007-0532 2006/12/07
DRWN:KFLIM CHKD:MLONG APPR:SKTOH 2006/12/07
DESCRIPTION
REV
E2

QUALITY SYMBOLS
▼=0
▽C=0

GENERAL TOLERANCES (UNLESS SPECIFIED)

	mm	INCH
4 PLACES	± ---	± ---
3 PLACES	± 0.10	± ---
2 PLACES	± 0.15	± ---
1 PLACE	± ---	± ---
ANGULAR ±1/2°		

DRAFT WHERE APPLICABLE MUST REMAIN WITHIN DIMENSIONS

DIMENSION STYLE: MM ONLY
SCALE: NTS
DESIGN UNITS: METRIC
THIRD ANGLE PROJECTION

		DATE
DRAWN BY	AAB	1998/05/15
CHECKED BY	MJM	1998/05/15
APPROVED BY	WAZ	1998/05/15

TITLE: 2MM DUAL ROW, FFC VERTICAL RECEPTACLE

MOLEX INCORPORATED

MATERIAL NO.: SEE TABLE
DOCUMENT NO.: SDA-79108-****
SHEET NO.: 2 OF 4

SIZE A3

THIS DRAWING CONTAINS INFORMATION THAT IS PROPRIETARY TO MOLEX INCORPORATED AND SHOULD NOT BE USED WITHOUT WRITTEN PERMISSION

MOLDED VOID OPTION

	ASSEMBLY		VOID LOCATION(S) SEE SHEET 1 FOR CONVENTION		PLATING OPTION	DIM. "A"	DIM. "B"
CKT. SIZE	EDP NO.	ENG. NO.	ROW	CKT. NO.(s)			
44	791085003	79108-5003	ROW A	13	4	(42.00)	(44.19)
44	791085004	79108-5004	ROW B	10	4	(42.00)	(44.19)

NOTES:

1. TERMINALS WILL BE PRESENT IN VOIDED LOCATIONS HOWEVER, PIN WINDOWS WILL BE CLOSED.
2. VOIDS CAN ONLY BE PRESENT IN ONE ROW OF THE CONNECTOR.

REVISE PDR#S1436
EC NO: S2007-0532 2006/12/06
DRWN:KFLIM 2006/12/07
CHKD:MLONG 2006/12/07
APPR:SKTOH 2006/12/07
DESCRIPTION
REV
E2

QUALITY SYMBOLS
▼=0
▽C=0

GENERAL TOLERANCES (UNLESS SPECIFIED)

	mm	INCH
4 PLACES	± ---	± ---
3 PLACES	± 0.10	± ---
2 PLACES	± 0.15	± ---
1 PLACE	± ---	± ---
ANGULAR ±1/2°		

DRAFT WHERE APPLICABLE MUST REMAIN WITHIN DIMENSIONS

DIMENSION STYLE: MM ONLY
SCALE: NTS
DESIGN UNITS: METRIC
THIRD ANGLE PROJECTION

DRAWN BY: AAB DATE: 1998/05/15
CHECKED BY: MJM DATE: 1998/05/15
APPROVED BY: WAZ DATE: 1998/05/15

TITLE: 2MM DUAL ROW, FFC VERTICAL RECEPTACLE

MOLEX INCORPORATED

MATERIAL NO.: SEE TABLE
DOCUMENT NO.: SDA-79108-****
SHEET NO.: 3 OF 4

SIZE A3

THIS DRAWING CONTAINS INFORMATION THAT IS PROPRIETARY TO MOLEX INCORPORATED AND SHOULD NOT BE USED WITHOUT WRITTEN PERMISSION

ASSEMBLY P/N PACKED IN T&R	CKT SIZE	PLATING OPTION	DIM A	DIM B	(F)	(Bo)	(W)
79108-6001	16	5	14.00	16.19	11.50	16.60	24.00

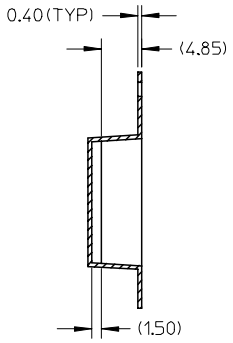

SECTION A-A

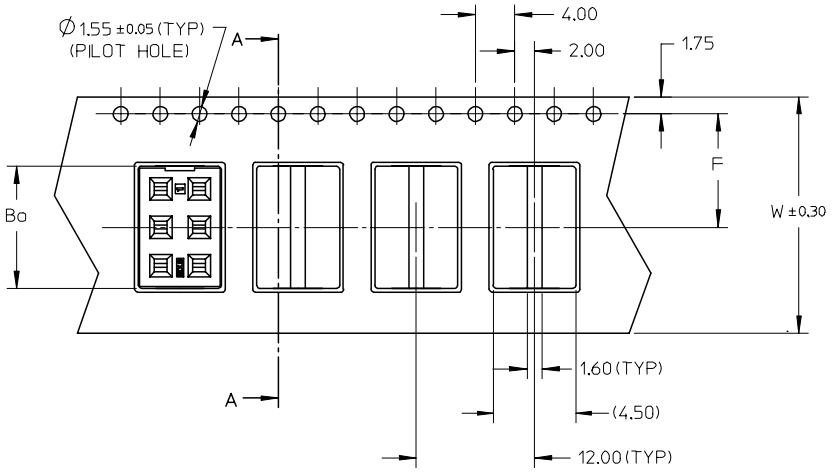

NOTES:

1. LEADER AND TRAILER TAPE

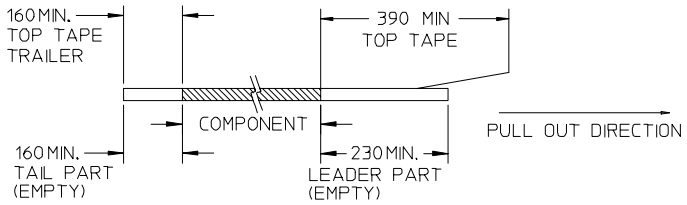

2. PEELING OFF FORCE OF THE TOP TAPE: 20-80gf.
   (PEELING DIRECTION AS SHOWN IN FOLLOWING FIGURE)

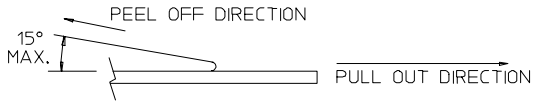

3. PACKAGING STANDARD IS AS PER EIA-481.
4. THE TAPE IS TREATED FOR ANTI-STATIC.
5. MATERIAL: CLEAR POLYSTYRENE.
6. TAPE & REEL QUANTITY = 800 PCS/REEL

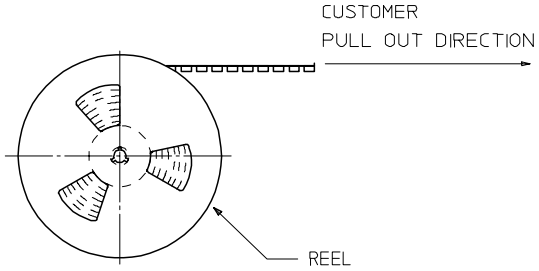

TAPE AND REEL ORIENTATION

REVISE PDR#S1436
EC NO: S2007-0532
DRWN:KFLIM 2006/12/06
CHKD:MLONG 2006/12/07
APPR:SKTOH 2006/12/07
DESCRIPTION
REV
E2

QUALITY SYMBOLS
▼=0
Ⓒ=0

GENERAL TOLERANCES (UNLESS SPECIFIED)

	mm	INCH
4 PLACES	± ---	± ---
3 PLACES	± 0.10	± ---
2 PLACES	± 0.15	± ---
1 PLACE	± ---	± ---

ANGULAR ±1/2°

DRAFT WHERE APPLICABLE MUST REMAIN WITHIN DIMENSIONS

DIMENSION STYLE: MM ONLY
SCALE: NTS
DESIGN UNITS: METRIC
THIRD ANGLE PROJECTION

DRAWN BY: AAB DATE: 1998/05/15
CHECKED BY: MJM DATE: 1998/05/15
APPROVED BY: WAZ DATE: 1998/05/15

TITLE: 2MM DUAL ROW, FFC VERTICAL RECEPTACLE

MOLEX INCORPORATED

MATERIAL NO.: SEE TABLE
DOCUMENT NO.: SDA-79108-****
SHEET NO.: 4 OF 4
SIZE: A3

THIS DRAWING CONTAINS INFORMATION THAT IS PROPRIETARY TO MOLEX INCORPORATED AND SHOULD NOT BE USED WITHOUT WRITTEN PERMISSION