molex
one company > a world of innovation

This document was generated on 05/27/2010

PLEASE CHECK WWW.MOLEX.COM FOR LATEST PART INFORMATION

Part Number: 0746501002
Status: Active
Overview: vhdm__hsd
Description: 2.00mm (.079") Pitch 8-Row VHDM-HSD™ Backplane Header, Guide Pin Signal Module, Pin End Version, 60 Circuits, Pin Length 6.25mm (.246")

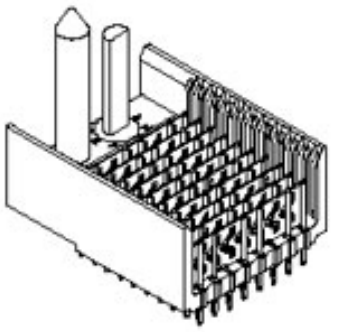

Series image - Reference only

Documents:
Drawing (PDF)
RoHS Certificate of Compliance (PDF)

Agency Certification

CSA	LR19980
UL	E29179

General

Product Family	Backplane Connectors
Series	74650
Application	Backplane
Application Tooling Documents	Tooling Manual
Comments	No Keying Position
Component Type	PCB Header
Overview	vhdm__hsd
Product Name	VHDM-HSD™
Style	N/A

Physical

Circuits (Loaded)	60
Circuits (maximum)	60
Color - Resin	Black
Durability (mating cycles max)	200
First Mate / Last Break	No
Flammability	94V-0
Guide to Mating Part	Yes
Keying to Mating Part	None
Material - Metal	Copper-Nickel-Silicon, High Performance Alloy (HPA), Stainless Steel
Material - Plating Mating	Gold
Material - Plating Termination	Tin-Lead
Material - Resin	High Temperature Thermoplastic
Number of Columns	10
Number of Pairs	Open Pin Field
Number of Rows	8
Orientation	Vertical
PC Tail Length (in)	0.098 In
PC Tail Length (mm)	2.50 mm
PCB Locator	No
PCB Retention	None
PCB Thickness Recommended (in)	0.070 In
PCB Thickness Recommended (mm)	1.80 mm
Packaging Type	Tube
Pitch - Mating Interface (in)	0.079 In
Pitch - Mating Interface (mm)	2.00 mm
Pitch - Term. Interface (in)	0.079 In
Pitch - Term. Interface (mm)	2.00 mm
Plating min: Mating (µin)	30
Plating min: Mating (µm)	0.75

EU RoHS
RoHS Compliant by Exemption
REACH SVHC
Contains SVHC: No
Halogen-Free Status
Halogen-Free

China RoHS
50
Pb

Need more information on product environmental compliance?

Email productcompliance@molex.com
For a multiple part number RoHS Certificate of Compliance, click here

Please visit the Contact Us section for any non-product compliance questions.

Search Parts in this Series
74650Series

Mates With
HSD Daughtercards 74680 , 74686

Use With
Daughtercard Modules

Application Tooling | **FAQ**
Tooling specifications and manuals are found by selecting the products below. Crimp Height Specifications are then contained in the Application Tooling Specification document.

Global

Description	Product #
VHDM® Signal Pin Inserter Repair Tool	0622015700
VHDM® Insertion Module for Advanced Mate Signal Header, 8 Row by 10 Wide, 20.00mm (.787")	0622020205

Plating min: Termination (µin)	30
Plating min: Termination (µm)	0.75
Polarized to PCB	Yes
Stackable	Yes
Surface Mount Compatible (SMC)	Yes
Temperature Range - Operating	-55°C to +105°C
Termination Interface: Style	Through Hole - Compliant Pin

Electrical

Current - Maximum per Contact	1A
Data Rate	5.0 Gbps
Real Signals (per 25mm)	72
Shield Type	Ground Plane Shield
Shielded	Yes
Voltage - Maximum	250V

Material Info

Reference - Drawing Numbers

Packaging Specification	PK-74061-003
Sales Drawing	SD-74650-002

VHDM-HSD is a trademark of Amphenol Corporation

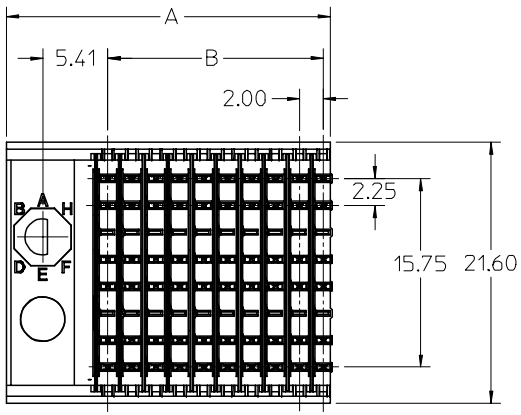

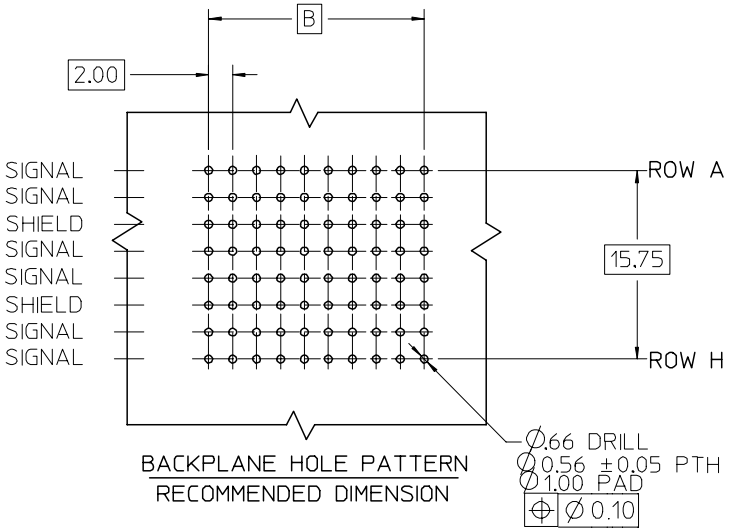

BACKPLANE HOLE PATTERN
RECOMMENDED DIMENSION

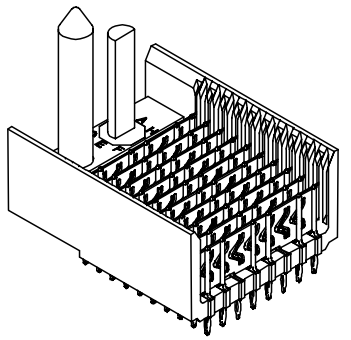

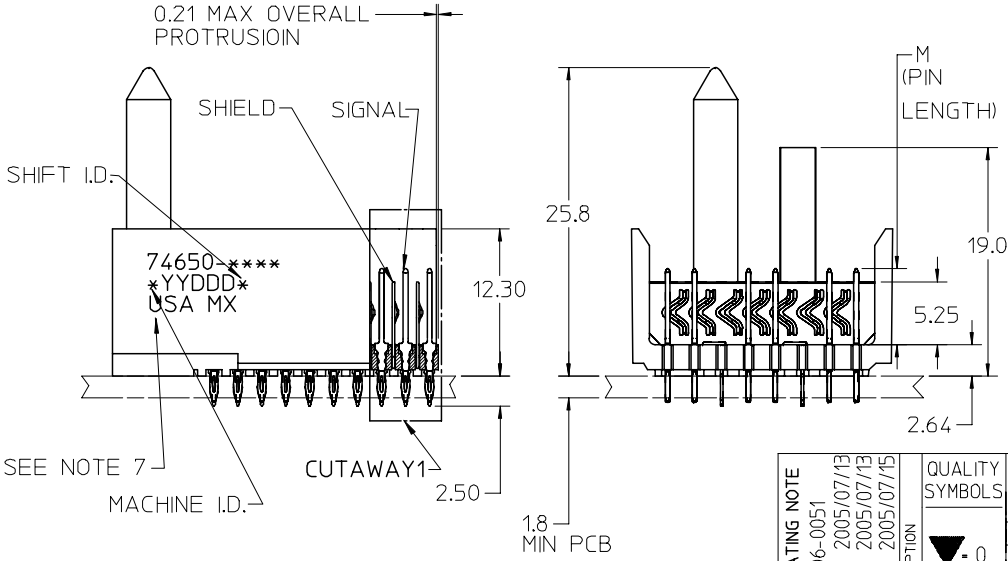

NOTES:

1. MATERIAL: HOUSING -LIQUID CRYSTAL POLYMER (LCP) GLASS-FILLED.
   UL 94-0. COLOR BLACK. SIGNAL & SHIELD -HIGH PERFORMANCE COPPER ALLOY.
2. FINISHES:
   CONTACT AREA: SELECTIVE GOLD (Au)
   PCB TAILS: SELECTIVE TIN/LEAD (Sn/Pb) OR SELECTIVE MATTE TIN (Sn)
   NICKEL (Ni) OVERALL.
3. THIS PART CONFORMS TO MOLEX PRODUCT SPECIFICATION PS-74031-999.
4. FOR MIXED CONTACT MATING LENGTHS CONSULT MOLEX FOR AVAILABILITY.
5. FOR SPECIFIC PART NUMBER AND MATING INFORMATION REFER TO SHEET 2.
6. PACKAGE PER PK-74061-003.
7. EITHER MARK PART NUMBER AND DATE CODE APPROXIMATELY WHERE
   SHOWN OR PLACE LABEL ON THE TUBE.

REVISED - PLATING NOTE
EC NO: UCP2006-0051 2005/07/13
DRWN:KMULVEY 2005/07/13
CH'KD: 2005/07/15
APPR: SREED
DESCRIPTION
REV
D

QUALITY SYMBOLS
▼ - 0
▽ (C) - 0

GENERAL TOLERANCES (UNLESS SPECIFIED)

	mm	INCH
4 PLACES	± ---	± ---
3 PLACES	± ---	± ---
2 PLACES	± ---	± ---
1 PLACE	± ---	± ---
ANGULAR ±1/2°		

DRAFT WHERE APPLICABLE
MUST REMAIN
WITHIN DIMENSIONS

SCALE	2.5:1
DESIGN UNITS	METRIC
	THIRD ANGLE PROJECTION
	REVISE ON CAD ONLY
DIMENSION STYLE	MM ONLY
DRAWN BY	MQWANG
DATE	2001/03/22
CHECKED BY	JLAURX
DATE	2001/03/27
APPROVED BY	CBIXLER
DATE	2001/03/27

TITLE
HSD SALES ASSEMBLY
8 ROW SIGNAL END
BACKPLANE

MOLEX INCORPORATED

MATERIAL NO.	DOCUMENT NO.	SHEET NO.
SEE SHEET 2	SD-74650-002	1 OF 2

THIS DRAWING CONTAINS INFORMATION THAT IS PROPRIETARY TO MOLEX INCORPORATED AND SHOULD NOT BE USED WITHOUT WRITTEN PERMISSION

B

74650

M/N 74650-( )	-**0*	-**1*	-**2*	-**3*	-**4*	-**5*	-**6*	-**7*	-**8*
KEYING PIN ORIENTATION	0	A	B	C	D	E	F	G	H

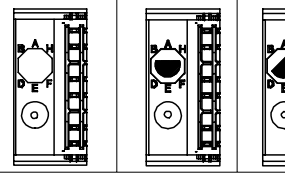

74650-****

NUMBER OF COLUMNS/ PLATING
10=10 COLUMN TIN/LEAD
25=25 COLUMN TIN/LEAD
90=10 COLUMN MATTE TIN
85=25 COLUMN MATTE TIN

CONTACT LOAD (PIN LENGTH)
1 & 6 = 4.75
2 & 7 = 6.25
3 & 8 = 4.25
4 & 9 = 5.15

DAUGHTERCARD CONNECTOR SIDE

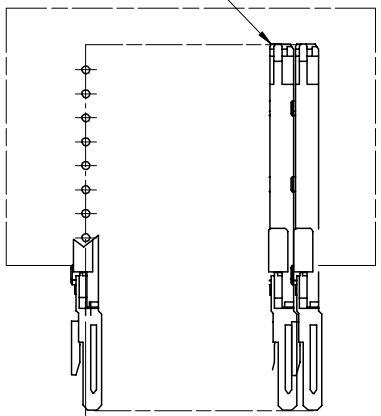

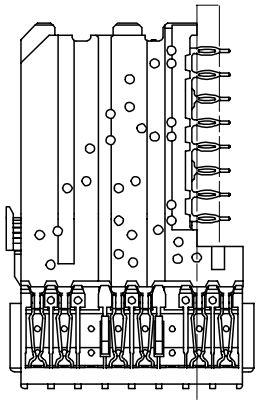

0.41
SIGNAL TO SIGNAL

2.45
TOP DAUGHTERCARD PCB TO CENTER OF ROW A

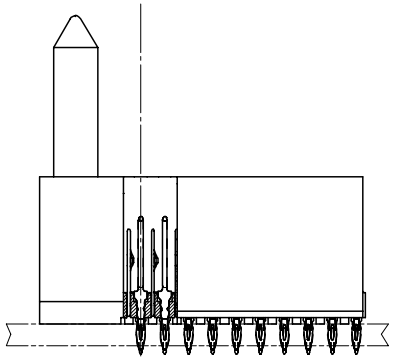

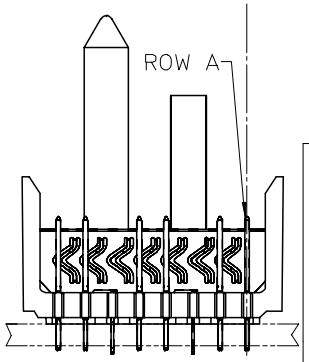

PART NUMBER	COLUMN	NUMBER OF SIGNAL PINS	NUMBER OF SHIELDS	A MAX	B	M	Au (um) MIN THICKNESS	Sn/Pb (um) THICKNESS
74650-*0*1	10	60	10	27.00	18.00	4.75	0.76	0.76-1.52
74650-*0*6							1.27	
74650-*5*1	25	150	25	57.00	48.00		0.76	
74650-*5*6							1.27	
74650-*0*2	10	60	10	27.00	18.00	6.25	0.76	
74650-*0*7							1.27	
74650-*5*2	25	150	25	57.00	48.00		0.76	
74650-*5*7							1.27	
74650-*0*3	10	60	10	27.00	18.00	4.25	0.76	
74650-*0*8							1.27	
74650-*5*3	25	150	25	57.00	48.00		0.76	
74650-*5*8							1.27	
74650-*0*4	10	60	10	27.00	18.00	5.15	0.76	
74650-*0*9							1.27	
74650-*5*4	25	150	25	57.00	48.00		0.76	
74650-*5*9							1.27	

SEE SHEET 1
EC NO: UCP2006-0051
DRWN:KMULVEY 2005/07/13
CH'KD: 2005/07/13
APPR: SREED 2005/07/15
DESCRIPTION
REV
D

QUALITY SYMBOLS
▼ - 0
▽ (C) - 0

GENERAL TOLERANCES (UNLESS SPECIFIED)

	mm	INCH
4 PLACES	± ---	± ---
3 PLACES	± ---	± ---
2 PLACES	± ---	± ---
1 PLACE	± ---	± ---
ANGULAR ±1/2°		

DRAFT WHERE APPLICABLE
MUST REMAIN WITHIN DIMENSIONS

SCALE 2.5:1
DESIGN UNITS METRIC
THIRD ANGLE PROJECTION
REVISE ON CAD ONLY
DIMENSION STYLE MM ONLY

DRAWN BY MQWANG DATE 2001/03/22
CHECKED BY JLAURX DATE 2001/03/27
APPROVED BY CBIXLER DATE 2001/03/27

TITLE
HSD SALES ASSEMBLY
8 ROW SIGNAL END
BACKPLANE

MOLEX INCORPORATED

MATERIAL NO. SEE TABLE
DOCUMENT NO. SD-74650-002
SHEET NO. 2 OF 2

THIS DRAWING CONTAINS INFORMATION THAT IS PROPRIETARY TO MOLEX INCORPORATED AND SHOULD NOT BE USED WITHOUT WRITTEN PERMISSION

B