This document was generated on 02/19/2020

PLEASE CHECK WWW.MOLEX.COM FOR LATEST PART INFORMATION

Part Number: 0732161500
Status: Active
Overview: TNC RF Connectors
Description: 50 Ohms, TNC Jack, Bulkhead Right-Angle Reverse Polarity, No Hardware Included, Tray

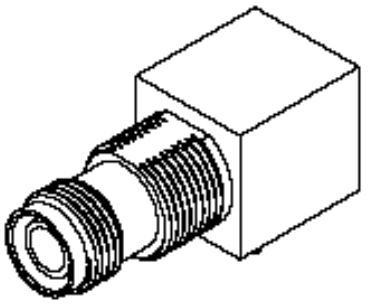

Series image - Reference only

Documents:
Drawing (PDF)
RoHS Certificate of Compliance (PDF)

General

Product Family	RF/Coax Connectors
Series	73216
Overview	TNC RF Connectors
Product Name	TNC
Style	PCB
Type	Miniature
UPC	800756876481
Wire/Cable Type	N/A

Physical

Gender	Jack
Keying to Mating Part	None
Net Weight	39.439/g
Orientation	Right Angle
PCB Mounting	Through Hole
PCB Thickness - Recommended	3.18mm
Packaging Type	Tray
Panel Mount	Yes
Panel Mount Method	Bulkhead
Reverse Polar	Yes

Electrical

Frequency	11 GHz
Impedance	50Ω
Power / Voltage	VOLTAGE: 500 Vrms@Sea Level

Solder Process Data

Duration at Max. Process Temperature (seconds)	010
Lead-freeProcess Capability	SMC&WAVE
Max. Cycles at Max. Process Temperature	002
Process Temperature max. C	260

Material Info

Reference - Drawing Numbers

Sales Drawing	SD-73216-150

EU ELV
Not Relevant

EU RoHS | **China RoHS**
Compliant with Exemption 6(c)

REACH SVHC
Not Contained Per -ED/01/2018 (15 January 2018)

Halogen-Free Status
Low-Halogen

For more information, please visit Contact US

China ROHS	50 Image
ELV	Not Relevant
RoHS Phthalates	Not Contained

Search Parts in this Series
73216 Series

This document was generated on 02/19/2020

PLEASE CHECK WWW.MOLEX.COM FOR LATEST PART INFORMATION