IEC Appliance Inlet C8, Snap-in Mounting, Front Side, Solder Terminal



Snap-in version

C8

70° C

See below:
Approvals and Compliances

Description
- Panel mount :
  Snap-in version , from front side
- 1 Function
- Appliance Inlet , Pin temperature 70 °C , Protection class II
- Solder terminals

Characteristics
- Contact pins rolled

References
We recommend for new applications the type 2570
Last order possibility: 30.09.2019

Weblinks
pdf data sheet, html datasheet, General Product Information, Approvals, Distributor-Stock-Check, Accessories, Detailed request for product

Technical Data

Ratings IEC	2.5 A / 250 VAC; 50 Hz
Ratings UL/CSA	2.5 A / 250 VAC; 60 Hz
Dielectric Strength	> 2 kVAC between L-N (1 min/50 Hz)
Allowable Operation Temperature	-25 °C to 70 °C
IP-Protection	from front side IP40 acc. to IEC 60529
Protection against electric shock	Suitable for appliances with protection class II acc. to IEC 61140
Terminal	Solder terminals
Panel Thickness S	Snap-in from 0.8 - 1.6 mm
Material: Housing	Thermoplastic, black, UL 94V-0

Appliance inlet/-outlet	C8 acc. to IEC 60320-1, UL 498, CSA C22.2 no. 42 (for cold conditions) pin-temperature 70 °C, 2.5 A, Protection Class II

Approvals and Compliances

Detailed information on product approvals, code requirements, usage instructions and detailed test conditions can be looked up in Details about Approvals

SCHURTER products are designed for use in industrial environments. They have approvals from independent testing bodies according to national and international standards. Products with specific characteristics and requirements such as required in the automotive sector according to IATF 16949, medical technology according to ISO 13485 or in the aerospace industry can be offered exclusively with customer-specific, individual agreements by SCHURTER.

Approvals

The approval mark is used by the testing authorities to certify compliance with the safety requirements placed on electronic products.

Approval Reference Type: 0721

Approval Logo	Certificates	Certification Body	Description
	SGSFimko Approvals	SGSFimko	Certificate Number:
	UL Approvals	UL	UL File Number: E96454
	CSA Approvals	CSA	CSA Certification Record: 73165
	CCC Approvals	CCC	CCC Certificate Number: 2011010204483971

PHASE-OUT

Product standards

Product standards that are referenced

Organization	Design	Standard	Description
IEC	Designed according to	IEC 60320-1	Appliance couplers for household and similar general purposes
UL	Designed according to	UL 498	Standard for Attachment Plugs and Receptacles
CSA Group	Designed according to	CSA C22.2 no. 42	General Use Receptacles, Attachment Plugs, and Similar Wiring Devices

Application standards

Application standards where the product can be used

Organization	Design	Standard	Description
IEC	Designed for applications acc.	IEC/UL 62368-1	IEC 62368-1 includes the basic requirements for safety of audio, video, information technology and office equipment.

Compliances

The product complies with following Guide Lines

Identification	Details	Initiator	Description
CE	CE declaration of conformity	SCHURTER AG	The CE marking declares that the product complies with the applicable requirements laid down in the harmonisation of Community legislation on its affixing in accordance with EU Regulation 765/2008.
RoHS	RoHS	SCHURTER AG	Directive RoHS 2011/65/EU, Amendment (EU) 2015/863
China RoHS	China RoHS	SCHURTER AG	The law SJ / T 11363-2006 (China RoHS) has been in force since 1 March 2007. It is similar to the EU directive RoHS.
REACH	REACH	SCHURTER AG	On 1 June 2007, Regulation (EC) No 1907/2006 on the Registration, Evaluation, Authorization and Restriction of Chemicals 1 (abbreviated as "REACH") entered into force.

Dimensions [mm]

0721-PS

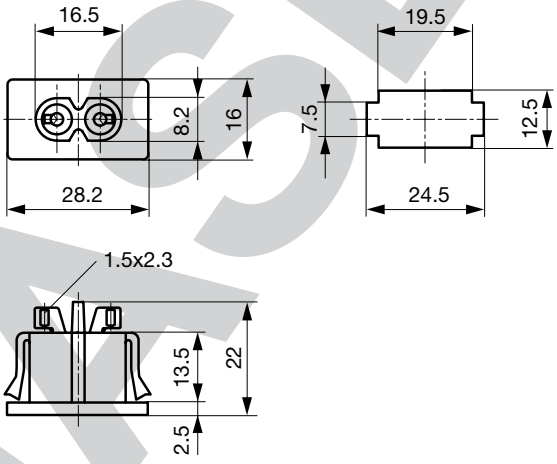

Solder terminals for wires

All Variants

Type	Panel mounting	Panel Thickness s [mm]	Terminal	Order Number
0721-PS	Snap-in	0.8 - 1.6	Solder terminals	4300.0098

Most Popular.

Availability for all products can be searched real-time:https://www.schurter.com/en/Stock-Check/Stock-Check-SCHURTER

Packaging unit

100 Pcs

PHASE-OUT

Mating Outlets/Connectors



Category / Description

Power Cord Overview complete

Cord Sets 2.5 A, IEC Connector, Black, 2.0 m, H03VVH2-F 2x0,75mm2, Connector IEC C7, 001500 mm, H03VVH2-F2G0.75, black	6013.0474
Cord Sets 2.5 A, IEC Connector, Black, 4.0 m, H03VVH2-F 2x0,75mm2, Connector IEC C7, 001500 mm, H05VVH2-F2G0.75, black	6013.0478
Kabelverbindung/2.5, IEC Connector, Black, 2.0 m, H03VVH2-F 2x0,75mm2, Connector IEC C7, 001500 mm, H03VVH2-F2G0.75, black	6051.0015

Power Cord further types to 0721-PS



Power Supply Cord Overview complete

Cord Sets 2.5 A, North America, Black, 2.0 m, SVT 2x18AWG, Connector IEC C7, 002500 mm, NISPT-2, black	6010.5274
Cord Sets 2.5 A, North America, Black, 4.0 m, SVT 2x18AWG, Connector IEC C7, 002500 mm, NISPT-2, black	6010.5278
Kabelverbindung/2.5, North America, Black, 2.5 SVT 2x18AWG, IEC C7, 002500 mm, SVT 2x18 AWG, black	6051.0018

Power Supply Cord further types to 0721-PS

PHASE-C

18.08.2020

The specifications, descriptions and illustrations indicated in this document are based on current information. All content is subject to modifications and amendments. Information furnished is believed to be accurate and reliable. However, users should independently evaluate the suitability and test each product selected for their own applications.