THESE DRAWINGS ARE THE PROPERTY OF QUALTEK ELECTRONICS AND NOT TO BE REPRODUCED FOR OR COMMUNICATED TO A THIRD PARTY WITHOUT THE EXPRESS WRITTEN PERMISSION OF AN OFFICER OF QUALTEK ELECTRONICS.

| REVISION | | | |
|---|---|---|---|
| REV. | DESCRIPTION | DATE | APPROVED |
| B | RoHS Compliancy | 06-01-06 | DP |
| C | Updated Specifications | 09-18-08 | LY |
| | | | |

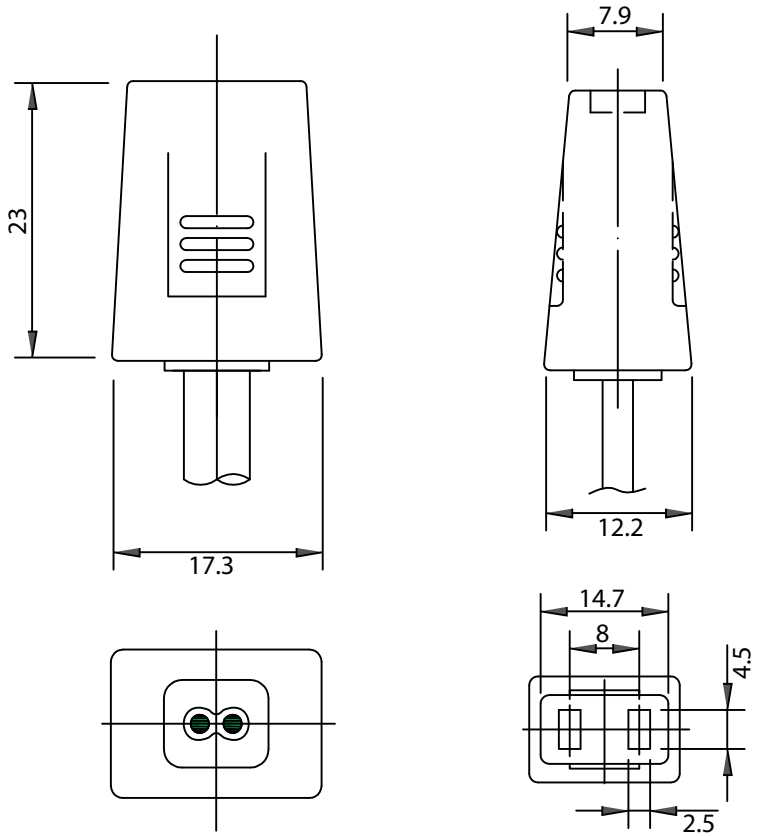


NOTES:

1. RATING: 10A 125VAC
2. CORDAGE: SPT-1, 18/2, 105˚C, 300V
3. CORD LENGTH: 60 INCHES
4. TERMINATION: BLUNT CUT
5. APPROVALS: UL, cUL
6. RoHS COMPLIANT

**CONTROLLED**

| Dim range (mm) | Tolerance +/- (mm) |
|---|---|
| 0-1 | 0.15 |
| 1-6 | 0.20 |
| 6-18 | 0.30 |
| 18-50 | 0.50 |
| 50-120 | 0.70 |
| 120-250 | 0.90 |
| 250-500 | 1.20 |

Qualtek Electronics Corp.
FAN-S DIVISION

Part Number: 07100-60 RoHS Compliant

Description:
MOLDED FAN CORD, FEMALE, STRAIGHT

| | UNIT: mm | REV: C |
|---|---|---|
| Drawn / Date | Checked / Date | Approved / Date |
| K.Huang 08-21-98 | 08-21-98 | JJH / 08-21-98 |