This document was generated on 05/28/2010

PLEASE CHECK WWW.MOLEX.COM FOR LATEST PART INFORMATION

Part Number: 0705630017
Status: Active
Overview: cgrid__sl_products
Description: 2.54mm (.100") Pitch SL™ Header, Single Row, Vertical, .180" Pocket, Shrouded, 18 Circuits, 0.38µm (15µ") Gold (Au) Selective Plating, Tin (Sn) PC Tail Plating

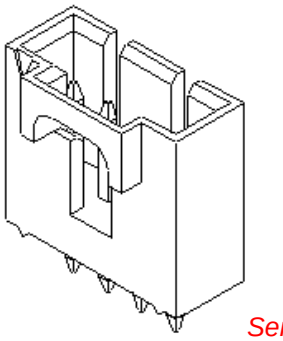

Series image - Reference only

Documents:

- 3D Model
- Packaging Specification (PDF)
- Drawing (PDF)
- Product Specification PS-70400 (PDF)
- Product Specification PS-70541 (PDF)
- RoHS Certificate of Compliance (PDF)

Agency Certification

CSA	LR19980
UL	E29179

General

Product Family	PCB Headers
Series	70563
Application	Wire-to-Board
Overview	cgrid__sl_products
Product Name	SL™

Physical

Breakaway	No
Circuits (Loaded)	18
Circuits (maximum)	18
Color - Resin	Black
Durability (mating cycles max)	50
Flammability	94V-0
Glow-Wire Compliant	No
Guide to Mating Part	Yes
Lock to Mating Part	Yes
Material - Metal	Brass, Phosphor Bronze
Material - Plating Mating	Gold
Material - Plating Termination	Tin
Material - Resin	High Temperature Thermoplastic
Number of Rows	1
Orientation	Vertical
PC Tail Length (in)	0.130 In
PC Tail Length (mm)	3.30 mm
PCB Locator	No
PCB Retention	None
PCB Thickness Recommended (in)	0.062 In
PCB Thickness Recommended (mm)	1.60 mm
Packaging Type	Tube
Pitch - Mating Interface (in)	0.100 In
Pitch - Mating Interface (mm)	2.54 mm
Plating min: Mating (µin)	15
Plating min: Mating (µm)	0.375
Plating min: Termination (µin)	75
Plating min: Termination (µm)	1.875
Polarized to Mating Part	Yes
Shrouded	Fully
Stackable	No
Temperature Range - Operating	-40°C to +105°C
Termination Interface: Style	Through Hole

EU RoHS
ELV and RoHS Compliant
REACH SVHC
Not Reviewed
Halogen-Free Status
Not Reviewed

China RoHS

Need more information on product environmental compliance?

Email productcompliance@molex.com
For a multiple part number RoHS Certificate of Compliance, click here

Please visit the Contact Us section for any non-product compliance questions.

Search Parts in this Series
70563Series

Mates With
70004

Electrical

Current - Maximum per Contact	3A
Voltage - Maximum	250V

Solder Process Data

Lead-free Process Capability	Wave Capable (TH only)

Material Info

Reference - Drawing Numbers

Packaging Specification	PK-70873-0016
Product Specification	PS-70400, PS-70541
Sales Drawing	SDA-70563-****

This document was generated on 05/28/2010

PLEASE CHECK WWW.MOLEX.COM FOR LATEST PART INFORMATION

OPTION "C"

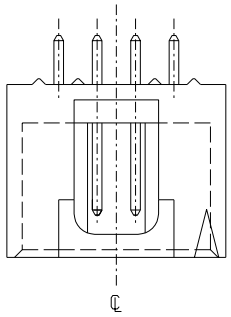

CKT. SIZE	"A" MM	"A" IN.	"B" REF. MM	"B" REF. IN.
4	7.62	.300	12.45	.490
5	10.16	.400	14.99	.590
6	12.70	.500	17.53	.690
7	15.24	.600	20.07	.790
8	17.78	.700	22.61	.890
9	20.32	.800	25.15	.990
10	22.86	.900	27.69	1.090
11	25.40	1.000	30.23	1.190
12	27.94	1.100	32.77	1.290
13	30.48	1.200	35.31	1.390
14	33.02	1.300	37.85	1.490
15	35.56	1.400	40.39	1.590
16	38.10	1.500	42.93	1.690
17	40.64	1.600	45.47	1.790
18	43.18	1.700	48.01	1.890
19	45.72	1.800	50.55	1.990
20	48.26	1.900	53.09	2.090
21	50.80	2.000	55.63	2.190
22	53.34	2.100	58.17	2.290
23	55.88	2.200	60.71	2.390
24	58.42	2.300	63.25	2.490
25	60.96	2.400	65.79	2.590

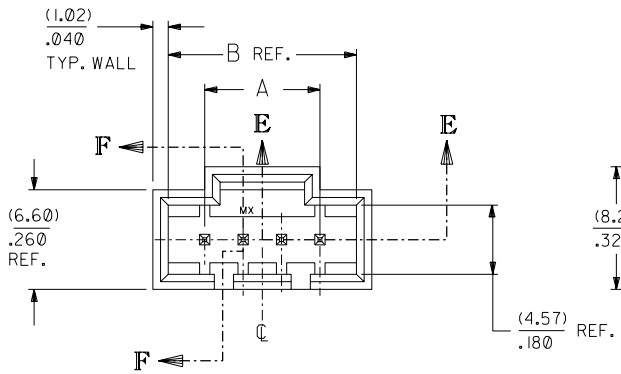

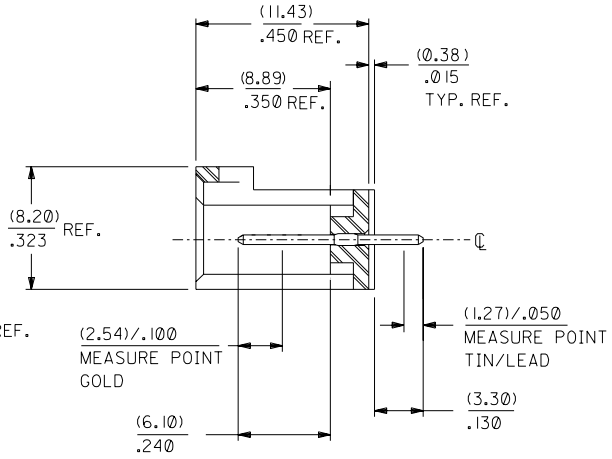

SECTION F-F

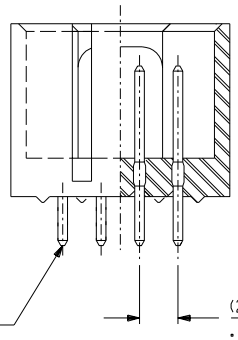

SECTION E-E

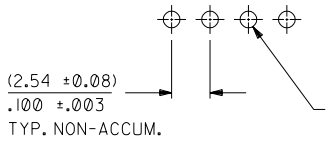

RECOMMENDED P.C. BOARD LAYOUT

(FOR USE WITH (1.57)/.062 THICK BOARD)

NOTES

1) MATERIAL: G.F. THERMOPLASTIC, 94V-0, COLOR-BLACK.
2) HEADER TO BE USED WITH NO. 70004 INTERIM CLIP, VERSION "A".
3) REFER TO PRODUCT SPEC: P.S.-70541.
4) STANDARD PACKAGING PER PK-70873-0016. OPTIONAL PACKAGING MAY BE AVAILABLE. (SEE DRAWING PK-70563-**** FOR ORDER NUMBERS)

*THE PRIMARY SHIPPING CARTON WILL BE LABELED "COMPLIANT TO RoHS DIRECTIVE 2002/95/EC AND ELV ANNEX II OF DIRECTIVE 2000/53/EC". CARTONS WITHOUT THIS LABEL MAY CONTAIN PRODUCT WITH LEAD.

PLATING PER E.S.-88-***

TIN - .000150 MINIMUM TIN PLATE OVER
.000050 MINIMUM NICKEL PLATE OVER-ALL.
15 GOLD - .000015 MINIMUM GOLD IN SELECT AREA
.000075 MINIMUM TIN IN SELECT AREA
.000050 MINIMUM NICKEL PLATE OVER-ALL.
30 GOLD - .000030 MINIMUM GOLD IN SELECT AREA
.000075 MINIMUM TIN IN SELECT AREA
.000050 MINIMUM NICKEL PLATE OVER-ALL.

		MFG.
2	B	
1	B	
SH.	REV.	

LTR.	REVISIONS	LTR.	REVISIONS
B	LEAD FREE UCP2004-1769 RWHITE 04/03/25		
A	RELEASED U30638 5/13/93 MGB		

DIMENSIONS SHOWN (METRIC) INCH
UNLESS OTHERWISE SPECIFIED TOLERANCES: ANGULAR ± 1/2°

	INCH	METRIC
3 PLACE	± .010	---
2 PLACE	± .014	± 0.25
1 PLACE	---	± 0.35

DRAFT WHERE APPLICABLE MUST REMAIN WITHIN DIMENSIONS

DRWG. BY AAB | CHK'D. BY AAB | APP'D. BY WAZ | SCALE 4 : 1

▽ = 0 ▼ = 0 REVISE ONLY ON CAD SYSTEM

TITLE: SALES ASSEMBLY HEADER - STRAIGHT MOUNT .100 CENTERS

molex MOLEX INCORPORATED LISLE,ILL. 60532 U.S.A. | SHEET NO. 1 OF 2 | DATE 05/13/93

PART NO. SEE CHART | DRWG. NO. SDA-70563-****

FILE NAME S70563X1.DGN

THIS DRAWING CONTAINS INFORMATION THAT IS PROPRIETARY TO MOLEX INC. AND SHOULD NOT BE USED WITHOUT WRITTEN PERMISSION.

DIV. DA | SIZE C

ENGINEERING NUMBER A-70563-	MANUFACTURE RELEASE STATUS	CONNECTOR END PLATING TYPE	CONNECTOR END PLATING H MEAS.	P.C. BOARD END PLATING TYPE	P.C. BOARD END PLATING K MEAS.
-0003-0024	R.F.M.	15 GOLD	(2.54) .100	TIN	(1.27) .050
-0038-0059	R.F.M.	TIN	(2.54) .100	TIN	(1.27) .050
-0073-0094					
-0108-0129	R.F.M.	30 GOLD	(2.54) .100	TIN	(1.27) .050

CKTS	EDP NUMBER	ENG NUMBER	EDP NUMBER	ENG NUMBER	EDP NUMBER	ENG NUMBER	EDP NUMBER	ENG NUMBER	EDP NUMBER	ENG NUMBER	EDP NUMBER	ENG NUMBER	EDP NUMBER	ENG NUMBER	CKTS
02	N.A.	N.A.	N.A.	N.A.	N.A.	N.A.	N.A.	N.A.							02
03	N.A.	N.A.	N.A.	N.A.	N.A.	N.A.	N.A.	N.A.							03
04	705-63-0003	A-70563-0003	705-63-0038	A-70563-0038		A-70563-0073	705-63-0108	A-70563-0108							04
05	705-63-0004	A-70563-0004	705-63-0039	A-70563-0039		A-70563-0074	705-63-0109	A-70563-0109							05
06	705-63-0005	A-70563-0005	705-63-0040	A-70563-0040		A-70563-0075	705-63-0110	A-70563-0110							06
07	705-63-0006	A-70563-0006	705-63-0041	A-70563-0041		A-70563-0076	705-63-0111	A-70563-0111							07
08	705-63-0007	A-70563-0007	705-63-0042	A-70563-0042		A-70563-0077	705-63-0112	A-70563-0112							08
09	705-63-0008	A-70563-0008	705-63-0043	A-70563-0043		A-70563-0078	705-63-0113	A-70563-0113							09
10	705-63-0009	A-70563-0009	705-63-0044	A-70563-0044		A-70563-0079	705-63-0114	A-70563-0114							10
11	705-63-0010	A-70563-0010	705-63-0045	A-70563-0045		A-70563-0080	705-63-0115	A-70563-0115							11
12	705-63-0011	A-70563-0011	705-63-0046	A-70563-0046		A-70563-0081	705-63-0116	A-70563-0116							12
13	705-63-0012	A-70563-0012	705-63-0047	A-70563-0047		A-70563-0082	705-63-0117	A-70563-0117							13
14	705-63-0013	A-70563-0013	705-63-0048	A-70563-0048		A-70563-0083	705-63-0118	A-70563-0118							14
15	705-63-0014	A-70563-0014	705-63-0049	A-70563-0049		A-70563-0084	705-63-0119	A-70563-0119							15
16	705-63-0015	A-70563-0015	705-63-0050	A-70563-0050		A-70563-0085	705-63-0120	A-70563-0120							16
17	705-63-0016	A-70563-0016	705-63-0051	A-70563-0051		A-70563-0086	705-63-0121	A-70563-0121							17
18	705-63-0017	A-70563-0017	705-63-0052	A-70563-0052		A-70563-0087	705-63-0122	A-70563-0122							18
19	705-63-0018	A-70563-0018	705-63-0053	A-70563-0053		A-70563-0088	705-63-0123	A-70563-0123							19
20	705-63-0019	A-70563-0019	705-63-0054	A-70563-0054		A-70563-0089	705-63-0124	A-70563-0124							20
21	705-63-0020	A-70563-0020	705-63-0055	A-70563-0055		A-70563-0090	705-63-0125	A-70563-0125							21
22	705-63-0021	A-70563-0021	705-63-0056	A-70563-0056		A-70563-0091	705-63-0126	A-70563-0126							22
23	705-63-0022	A-70563-0022	705-63-0057	A-70563-0057		A-70563-0092	705-63-0127	A-70563-0127							23
24	705-63-0023	A-70563-0023	705-63-0058	A-70563-0058		A-70563-0093	705-63-0128	A-70563-0128							24
25	705-63-0024	A-70563-0024	705-63-0059	A-70563-0059		A-70563-0094	705-63-0129	A-70563-0129							25

LTR.	REVISIONS	LTR.	REVISIONS
		B	SEE SHEET 1
		A	SEE SHEET 1

DIMENSIONS SHOWN (METRIC) INCH

UNLESS OTHERWISE SPECIFIED TOLERANCES: ANGULAR ± 1/2°

	INCH	METRIC
3 PLACE	± ---	---
2 PLACE	± ---	± ---
1 PLACE	---	± ---

DRAFT WHERE APPLICABLE MUST REMAIN WITHIN DIMENSIONS

DRWG. BY	AAB	CHK'D. BY	AAB
APP'D. BY	WAZ	SCALE	2

▽ = Ø ▼ = Ø REVISE ONLY ON CAD SYSTEM

TITLE: SALES ASSEMBLY HEADER - STRAIGHT MOUNT .100 CENTERS

molex MOLEX INCORPORATED LISLE,ILL. 60532 U.S.A.

SHEET NO. 2 | DATE 05/13/93

PART NO. SEE CHART | DRWG. NO. SDA-70563-****

FILE NAME S70563X2 DGN

THIS DRAWING CONTAINS INFORMATION THAT IS PROPRIETARY TO MOLEX INC. AND SHOULD NOT BE USED WITHOUT WRITTEN PERMISSION.

DIV. DA | SIZE C