This document was generated on 04/21/2010

PLEASE CHECK WWW.MOLEX.COM FOR LATEST PART INFORMATION

Part Number: 0681452811

Status: Active

Description: 2.50mm (.098") Pitch Wire-to-Board Header, 1.02mm (.040") Tab Type, Vertical, 28 Circuits, Black

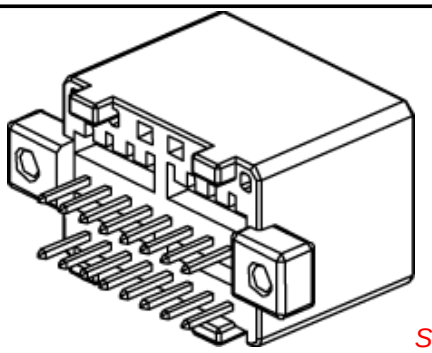

Series image - Reference only

Documents:

3D Model
Drawing (PDF)
Product Specification PS-68145-002 (PDF)
RoHS Certificate of Compliance (PDF)

General

Product Family	PCB Headers
Series	68145
Application	Wire-to-Board
Product Name	N/A

Physical

Breakaway	No
Circuits (Loaded)	28
Circuits (maximum)	28
Color - Resin	Black
Durability (mating cycles max)	50
First Mate / Last Break	No
Glow-Wire Compliant	No
Guide to Mating Part	No
Keying to Mating Part	None
Lock to Mating Part	Yes
Material - Metal	Brass
Material - Plating Mating	Tin
Material - Plating Termination	Tin
Material - Resin	Polyester
Number of Rows	2
Orientation	Vertical
PC Tail Length (in)	0.146 In
PC Tail Length (mm)	3.70 mm
PCB Locator	No
PCB Retention	Yes
PCB Thickness Recommended (in)	0.047 In
PCB Thickness Recommended (mm)	1.20 mm
Packaging Type	Tray
Pitch - Mating Interface (in)	0.098 In
Pitch - Mating Interface (mm)	2.50 mm
Pitch - Term. Interface (in)	0.098 In
Pitch - Term. Interface (mm)	2.50 mm
Plating min: Mating (µin)	32
Plating min: Mating (µm)	0.80
Plating min: Termination (µin)	32
Plating min: Termination (µm)	0.80
Polarized to Mating Part	Yes
Polarized to PCB	Yes
Shrouded	Closed Ends
Stackable	No
Surface Mount Compatible (SMC)	No
Temperature Range - Operating	-30°C to +85°C
Termination Interface: Style	Through Hole

Electrical

EU RoHS
ELV and RoHS Compliant
REACH SVHC
Not Reviewed
Halogen-Free Status
Not Reviewed

China RoHS

Need more information on product environmental compliance?

Email productcompliance@molex.com
For a multiple part number RoHS Certificate of Compliance, click here

Please visit the Contact Us section for any non-product compliance questions.

Search Parts in this Series
68145Series

Mates With
64002 Crimp Housing. 35563 Crimp Housing

Current - Maximum per Contact	5A
Voltage - Maximum	13V DC (RMS)

Material Info

Reference - Drawing Numbers

Product Specification	PS-68145-002
Sales Drawing	SD-68145-228

This document was generated on 04/21/2010

PLEASE CHECK WWW.MOLEX.COM FOR LATEST PART INFORMATION

NO.	PART NO.	COLOR
B 1	68145-2811	BLACK
2	68145-2815	GRAY
3	68145-2816	WHITE

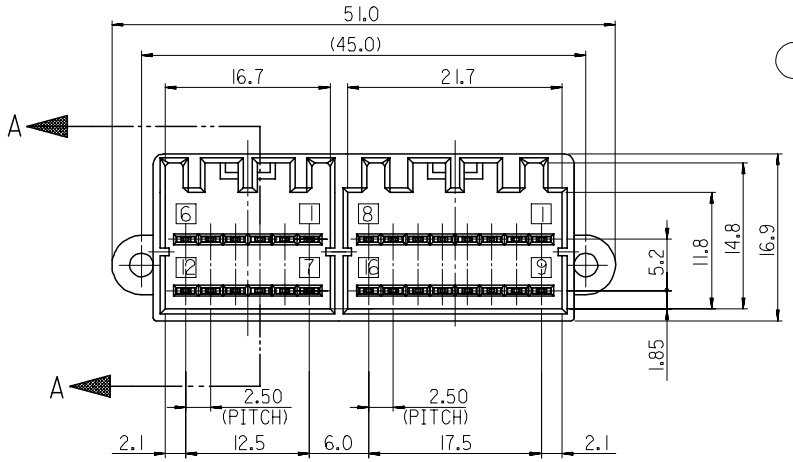

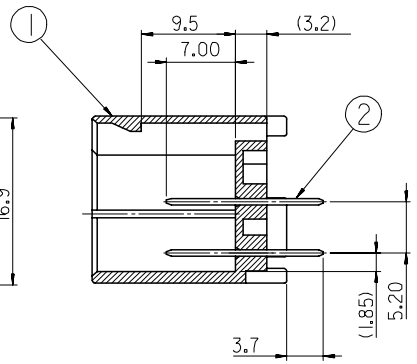

SECTION A-A

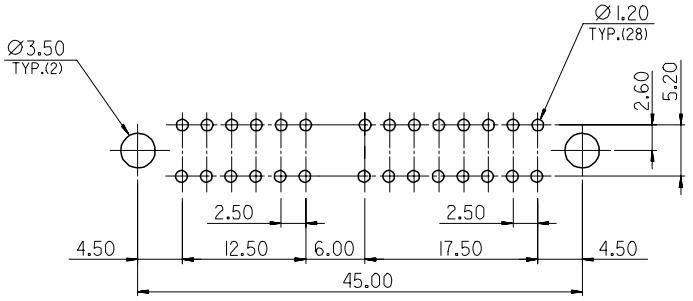

RECOMMENED P.C.B HOLE DIM.(MOUNT SIDE)

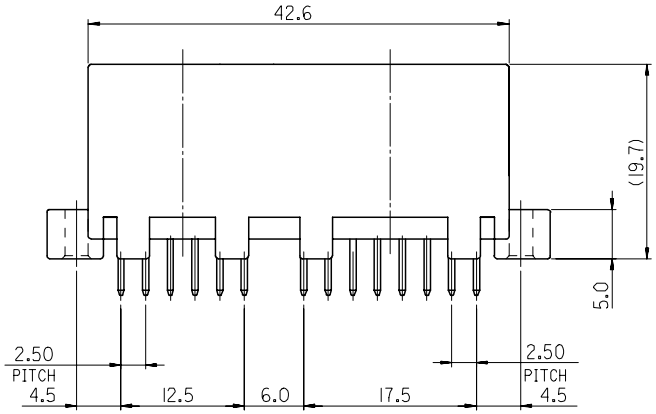

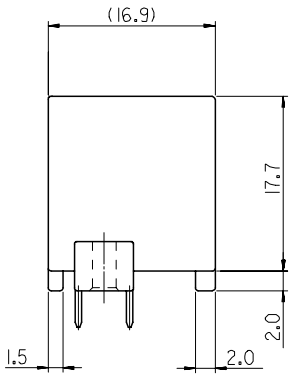

NOTES

1. APPLICABLE FEMALE HOUSING : 64002-121*, 35563-161*

NO.	DESCRIPTION	MATERIAL	REMARK
1	HOUSING	PBT, G/F 15%	UL94HB
2	PIN(L)	BRASS	PRE-TIN PLATED
3	PIN(S)		

DO NOT SCALE DRAWING
DIMENSION IN METRIC

DWG. NO. SD-68145-228

SIMILAR ITEM

PROJECT NO.

ADDED OF PART
EC NO. KOR2006-0147
DRWN: EO.KIM 06/06/01
CH'K: BC.YOON 06/06/01
APPR: SH.CHOI 06/06/01
DESCRIPTION

B
REV

QUALITY SYMBOLS
MAJOR
CRITICAL
C

GENERAL TOLERANCES: (UNLESS SPECIFIED)

	mm	INCH
4 PLACES	±0.	±.
3 PLACES	±0.	±.
2 PLACES	±0.25	±.
1 PLACE	±0.30	±.

ANGULAR: ± 1 °

DRAFT WHERE APPLICABLE MUST REMAIN WITHIN DIMENSIONS

SCALE 2:1
DESIGN UNITS ☒mm ☐INCH
THIRD ANGLE PROJECTION
DIMENSIONS: ☐mm/INCH ☐INCH/mm ☒mm ONLY
SHT REV
REVISE ON CAD ONLY

DRAWN BY & DATE B.C.YOON 02/07/12
CHECKED BY & DATE Y.SIK.KIM 02/07/12
APPROVED BY & DATE C.W.LEE 02/07/12

TITLE: .040 WIRE TO BOARD CONNECTOR 28P HEADER ASS'Y (VTL)

MOLEX INCORPORATED

CAD FILENAME S68145-28C.dgn
MATERIAL NO. SEE TABLE
DRAWING NO. SD-68145-228
SHEET NO. 1 OF 1

THIS DRAWING CONTAINS INFORMATION THAT IS PROPRIETARY TO MOLEX INCORPORATED AND SHOULD NOT BE USED WITHOUT WRITTEN PERMISSION.

SIZE B

MX-A3