This document was generated on 04/07/2010

PLEASE CHECK WWW.MOLEX.COM FOR LATEST PART INFORMATION

Part Number: 0670687041

Status: Active

Description: Universal Serial Bus (USB) Shielded I/O Type B Receptacle, Right Angle with Kinked Solder Tabs, Color Black, 0.76µm (30µ") Gold (Au) Plating, Tray Pack, Lead-Free

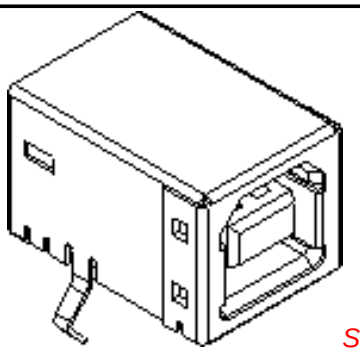

Series image - Reference only

Documents:

3D Model
Drawing (PDF)
Product Specification PS-67998-0000 (PDF)
RoHS Certificate of Compliance (PDF)

General

Product Family	I/O Connectors
Series	67068
Application	Wire-to-Board
Comments	Single
Component Type	Receptacle
Product Name	USB
Type	B

Physical

Boot Color	N/A
Circuits (Loaded)	4
Circuits (maximum)	4
Gender	Receptacle
Lock to Mating Part	Yes
Material - Plating Mating	Gold
Material - Plating Termination	Tin
Number of Rows	2
Orientation	Right Angle
PC Tail Length (in)	0.110 In
PC Tail Length (mm)	2.80 mm
PCB Locator	Yes
PCB Retention	Yes
PCB Thickness Recommended (in)	0.063 In
PCB Thickness Recommended (mm)	1.60 mm
Packaging Type	Tray
Panel Mount	No
Pitch - Mating Interface (in)	0.098 In
Pitch - Mating Interface (mm)	2.50 mm
Pitch - Term. Interface (in)	0.098 In
Pitch - Term. Interface (mm)	2.50 mm
Plating min: Mating (µin)	30
Plating min: Mating (µm)	0.76
Polarized to Mating Part	Yes
Polarized to PCB	Yes
Ports	1
Surface Mount Compatible (SMC)	Yes
Temperature Range - Operating	0°C to +50°C
Termination Interface: Style	Through Hole
Waterproof / Dustproof	No
Wire Size AWG	N/A

Electrical

Current - Maximum per Contact	1.5A
Shield Type	Full Shield
Shielded	Yes
Voltage - Maximum	30V (RMS)

EU RoHS
ELV and RoHS Compliant
REACH SVHC
Not Reviewed
Halogen-Free Status
Not Reviewed

China RoHS

Need more information on product environmental compliance?

Email productcompliance@molex.com
For a multiple part number RoHS Certificate of Compliance, click here

Please visit the Contact Us section for any non-product compliance questions.

Search Parts in this Series
67068Series

Mates With
USB Type B Plug

Solder Process Data

Lead-free Process Capability	Wave Capable (TH only)
Process Temperature max. C	260

Material Info

Reference - Drawing Numbers

Product Specification	PS-67998-0000
Sales Drawing	SD-67068-003

This document was generated on 04/07/2010

PLEASE CHECK WWW.MOLEX.COM FOR LATEST PART INFORMATION

NOTES :

1. MATERIAL :
   HOUSING : (a) HIGH TEMP. NYLON ,GLASS FIBER FILLED,UL94V-0, COLOR: BLACK,
   (b) POLYESTER , GLASS FIBER FILLED,UL94V-0, COLOR: WHITE,
   TERMINAL : PHOSPHOR BRONZE
   METAL SHELL : COPPER ALLOY

2. PLATING :
   TERMINAL :
   CONTACT AREA : (a) GOLD FLASH.
   (b) GLOD (Au), THICKNESS = 30 MICROINCH MINIMUM.
   /0.76 MICROMETER MINIMUM.
   SOLDER TAIL :
   PURE TIN(Sn) THICKNESS= 75 MICROINCH MINIMUM .
   / 1.9 MICROMETER MINIMUM.
   UNDER PLATE : NICKEL (Ni), THICKNESS= 50 MICROINCH MINIMUM.
   /1.27 MICROMETER MINIMUM.
   METAL SHELL :
   PURE TIN(Sn) , THICKNESS= 50 MICROINCH MINIMUM.
   / 1.27 MICROMETER MINIMUM.
   UNDER PLATE : NICKEL (Ni) , THICKNESS= 50 MICROINCH MINIMUM.
   /1.27 MICROMETER MINIMUM.

3 DATUM AND BASIC DIMENSIONS ESTABLISHED BY CUSTOMER
   RECOMMENDED PCB THICKNESS : 1.60±0.05

4 PRODUCT SPECIFICATION : REFER TO PS-67998-0000

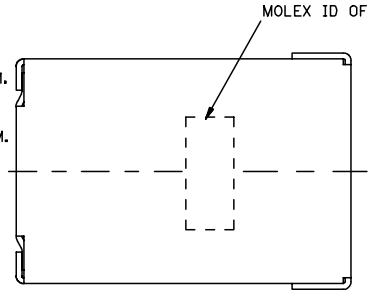

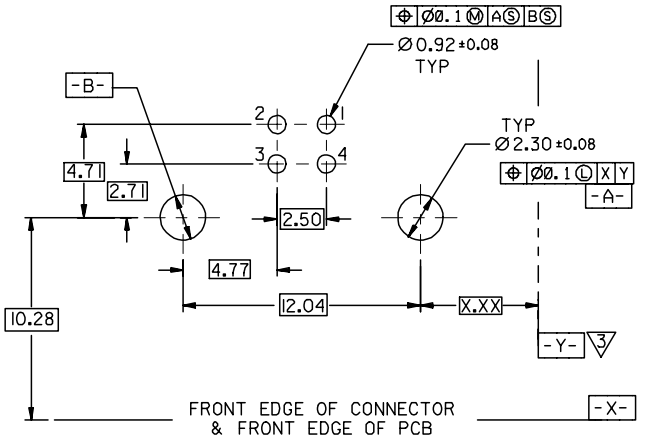

RECOMMENDED PCB LAYOUT

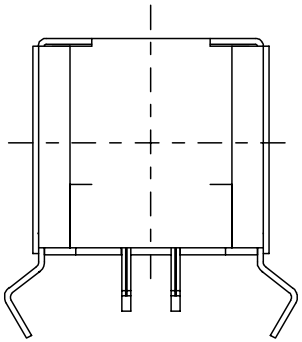

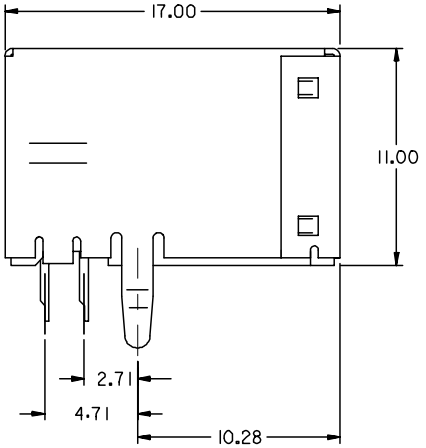

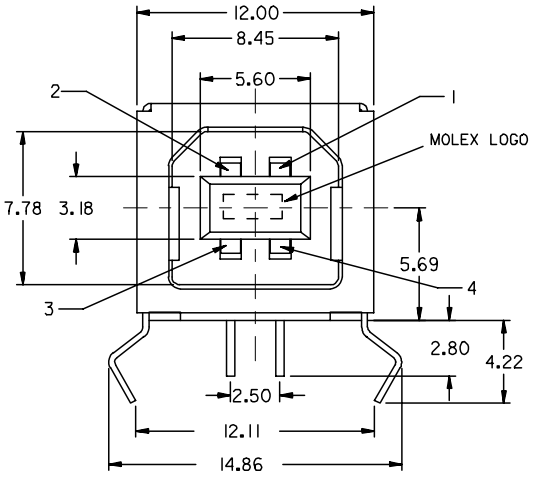

PART NUMBER LEGEND:

67068- * * 0 *

8 : BLACK HOUSING
9 : WHITE HOUSING

0 : TRAY PACKAGING
1 : TUBE PACKAGING

KINK TYPE BOARD LOCK

0 : GOLD FLASH
1 : 0.76 MICROMETER/30 MICROINCH GOLD

REV	DESCRIPTION	DRWN	CH'KD	APPR	EC NO
A	NEW RELEADE	DAVID HU 2004/11/5	HARVEY 2004/11/25	YTYAP 2004/11/25	SH2005-0142

QUALITY SYMBOLS
▼=0
▽=0

GENERAL TOLERANCES (UNLESS SPECIFIED)

	mm	INCH
4 PLACES	± ---	± ---
3 PLACES	± ---	± ---
2 PLACES	± 0.25	± ---
1 PLACE	± 0.25	± ---
ANGULAR ± 3 °		

DRAFT WHERE APPLICABLE MUST REMAIN WITHIN DIMENSIONS

DIMENSION STYLE	MM ONLY
SCALE	4:1
DESIGN UNITS	METRIC
	THIRD ANGLE PROJECTION
DRAWN BY	DAVID HU
DATE	2004/11/05
CHECKED BY	HARVEY
DATE	2004/11/05
APPROVED BY	
DATE	
MATERIAL NO.	SEE NOTES
TITLE	USB B TYPE CONNECTOR KINK TYPE BOARD LOCK (LEAD-FREE)
	MOLEX INCORPORATED
DOCUMENT NO.	SD-67068-003
SHEET NO.	1 OF 4
SIZE	A3

THIS DRAWING CONTAINS INFORMATION THAT IS PROPRIETARY TO MOLEX INCORPORATED AND SHOULD NOT BE USED WITHOUT WRITTEN PERMISSION

NOTES :

1. MATERIAL :
   HOUSING : (a) HIGH TEMP. NYLON, GLASS FIBER FILLED,UL94V-0, COLOR: BLACK,
   (b) POLYESTER , GLASS FIBER FILLED,UL94V-0, COLOR: WHITE,
   TERMINAL : PHOSPHOR BRONZE
   METAL SHELL : COPPER ALLOY

2. PLATING :
   TERMINAL :
   CONTACT AREA : (a) GOLD FLASH.
   (b) GLOD (Au), THICKNESS = 30 MICROINCH MINIMUM.
   /0.76 MICROMETER MINIMUM.
   SOLDER TAIL :
   PURE TIN(Sn) THICKNESS= 75 MICROINCH MINIMUM .
   /1.9 MICROMETER MINIMUM.
   UNDER PLATE : NICKEL (Ni), THICKNESS= 50 MICROINCH MINIMUM.
   /1.27 MICROMETER MINIMUM.
   METAL SHELL :
   PURE TIN(Sn) THICKNESS= 50 MICROINCH MINIMUM.
   /1.27 MICROMETER MINIMUM.
   UNDER PLATE : NICKEL (Ni) , THICKNESS= 50 MICROINCH MINIMUM.
   /1.27 MICROMETER MINIMUM.

3 DATUM AND BASIC DIMENSIONS ESTABLISHED BY CUSTOMER
   RECOMMENDED PCB THICKNESS : 1.60±0.05

4 PRODUCT SPECIFICATION : REFER TO PS-67998-0000

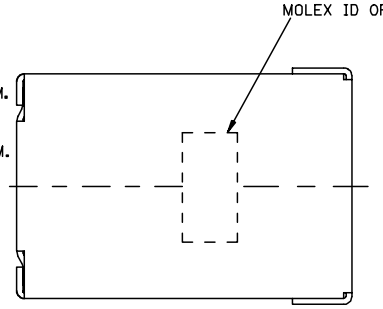

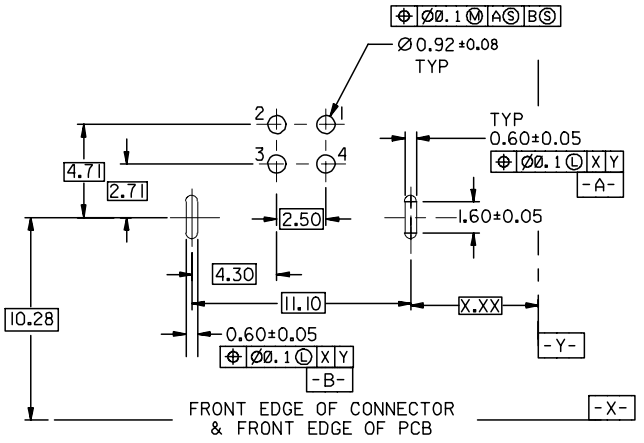

RECOMMENDED PCB LAYOUT

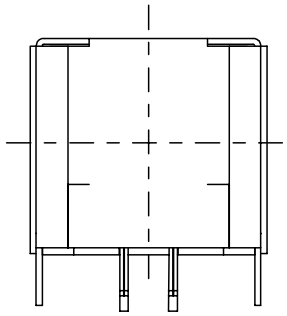

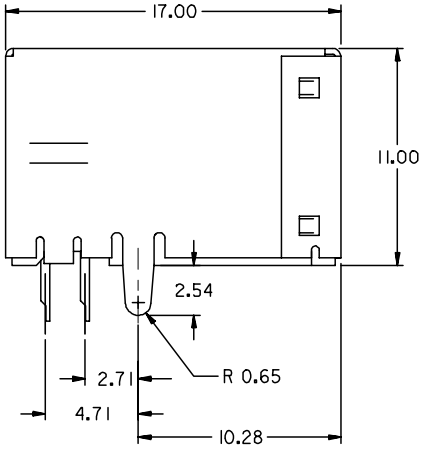

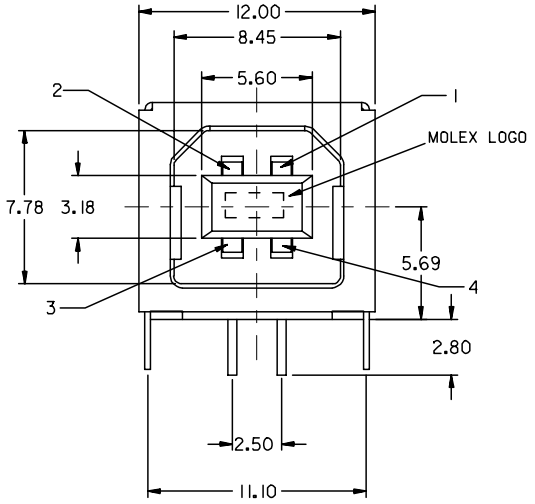

PART NUMBER LEGEND:

67068- * * I *

8 : BLACK HOUSING
9 : WHITE HOUSING

0 : TRAY PACKAGING
I : TUBE PACKAGING

STRAIGHT TAB

0 : GOLD FLASH
I : 0.76 MICROMETER/30 MICROINCH GOLD

REV	DESCRIPTION	EC NO: SH2005-0142	DRWN: DAVID HU 2004/11/5	CH'KD:HARVEY 2004/11/25	APPR:YTYAP 2004/11/25
A	NEW RELEASE				

QUALITY SYMBOLS
▼=0
▽=0

GENERAL TOLERANCES (UNLESS SPECIFIED)

	mm	INCH
4 PLACES	± ---	± ---
3 PLACES	± ---	± ---
2 PLACES	± 0.25	± ---
1 PLACE	± 0.25	± ---

ANGULAR ± 3 °

DRAFT WHERE APPLICABLE MUST REMAIN WITHIN DIMENSIONS

DIMENSION STYLE: MM ONLY
SCALE: 4:1
DESIGN UNITS: METRIC
THIRD ANGLE PROJECTION

DRAWN BY: DAVID HU DATE: 2004/11/05
CHECKED BY: DATE: 2004/11/05
APPROVED BY: DATE:
MATERIAL NO.: SEE NOTES

TITLE: USB B TYPE CONNECTOR WITH STRAIGHT TAB (LEAD-FREE)

MOLEX INCORPORATED

DOCUMENT NO.: SD-67068-003
SHEET NO.: 2

SIZE: A3

THIS DRAWING CONTAINS INFORMATION THAT IS PROPRIETARY TO MOLEX INCORPORATED AND SHOULD NOT BE USED WITHOUT WRITTEN PERMISSION

NOTES :

1. MATERIAL :
   HOUSING : (a) HIGH TEMP. NYLON, GLASS FIBER FILLED,UL94V-0, COLOR: BLACK,

   TERMINAL : PHOSPHOR BRONZE
   METAL SHELL : COPPER ALLOY

2. PLATING :
   TERMINAL :
   CONTACT AREA : (a) GOLD FLASH.
   (b) GLOD (Au), THICKNESS = 30 MICROINCH MINIMUM.
   /0.76 MICROMETER MINIMUM.
   SOLDER TAIL :
   PURE TIN(Sn) THICKNESS= 75 MICROINCH MINIMUM .
   /1.9 MICROMETER MINIMUM.
   UNDER PLATE : NICKEL (NI), THICKNESS= 50 MICROINCH MINIMUM.
   /1.27 MICROMETER MINIMUM.
   METAL SHELL :
   PURE TIN(SN), THICKNESS= 50 MICROINCH MINIMUM.
   /1.27 MICROMETER MINIMUM.
   UNDER PLATE : NICKEL (NI) , THICKNESS= 50 MICROINCH MINIMUM.
   /1.27 MICROMETER MINIMUM.

3 DATUM AND BASIC DIMENSIONS ESTABLISHED BY CUSTOMER

RECOMMENDED PCB THICKNESS : 1.60±0.05

4 PRODUCT SPECIFICATION : REFER TO PS-67998-0000

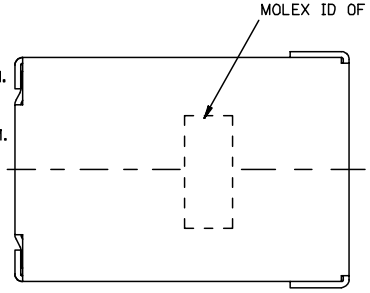

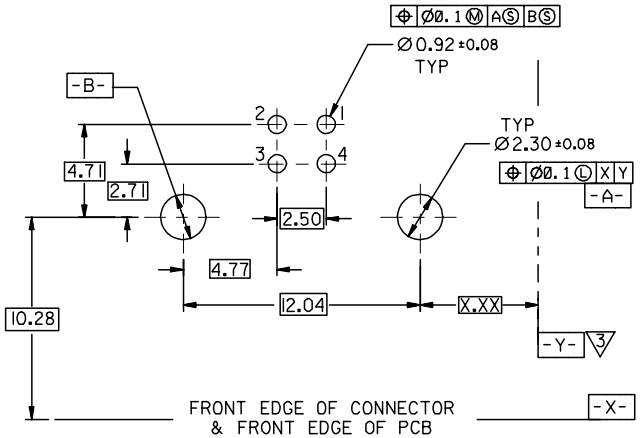

RECOMMENDED PCB LAYOUT

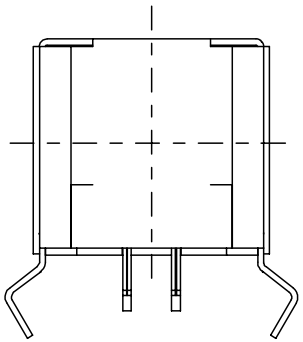

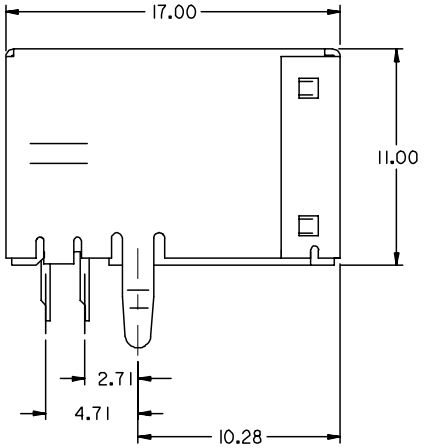

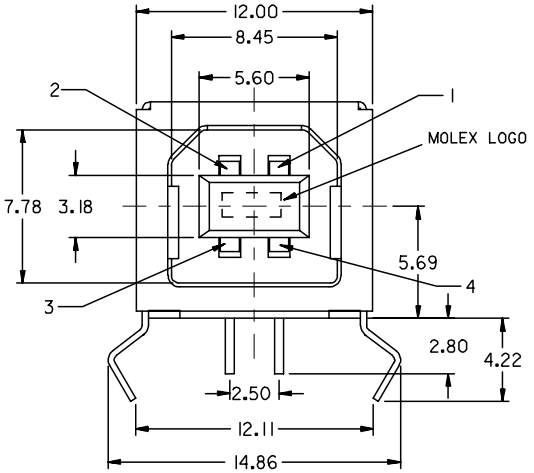

PART NUMBER LEGEND:

67068- 7041

LTR	REVISION RECORD	ECN	DR	DATE
A	NEW RELEASE FOR LEAD-FREE		DAVID HU	2004/11/5

REVISE ONLY ON CAD SYSTEM

MATERIAL :	SEE NOTES
FINISH :	SEE NOTES
WIRE RANGE :	
INS. RANGE :	
DRAWN BY	2004/11/5 DAVID HU
CHK'D BY	
APPR'D BY	
SCALE	4 : 1

MOLEX TAIWAN LTD.
SHEET 3 OF 4

GENERAL TOLERANCES
ANGLE : ± 3° DIM : ± .25/.010

ENG. NO.: SD-67068-003 REV A

TITLE : HIGH TEMP,USB B TYPE CONNECTOR KINK TYPE BOARD LOCK (LEAD-FREE)

ENG. NO | EDP NO. | SIMILAR ITEM | CAD FILE : | DO NOT SCALE DRAWING

THIS DRAWING CONTAINS INFORMATION THAT IS PROPRIETARY TO MOLEX (FEML) AND SHOULD NOT BE USED WITHOUT WRITTEN PERMISSION

MXT , Sa - 13

ENG. NO SDA-67068-****

EDP NO.

SIMILAR ITEM

CAD FILE : S6706802

DO NOT SCALE DRAWING

NOTES :

1. MATERIAL :
   HOUSING : (a) HIGH TEMP. NYLON, GLASS FIBER FILLED,UL94V-0, COLOR: BLACK,

   TERMINAL : PHOSPHOR BRONZE
   METAL SHELL : COPPER ALLOY

2. PLATING :
   TERMINAL :
   CONTACT AREA : (a) GOLD FLASH.
   (b) GLOD (Au), THICKNESS = 30 MICROINCH MINIMUM.
   /0.76 MICROMETER MINIMUM.
   SOLDER TAIL :
   PURE TIN(Sn) THICKNESS= 75 MICROINCH MINIMUM .
   /1.9 MICROMETER MINIMUM.
   UNDER PLATE : NICKEL (NI), THICKNESS= 50 MICROINCH MINIMUM.
   /1.27 MICROMETER MINIMUM.
   METAL SHELL :
   PURE TIN(SN) THICKNESS= 50 MICROINCH MINIMUM.
   /1.27 MICROMETER MINIMUM.
   UNDER PLATE : NICKEL (NI) , THICKNESS= 50 MICROINCH MINIMUM.
   /1.27 MICROMETER MINIMUM.
3. DATUM AND BASIC DIMENSIONS ESTABLISHED BY CUSTOMER
   RECOMMENDED PCB THICKNESS : 1.60±0.05
4. PRODUCT SPECIFICATION : REFER TO PS-67998-0000

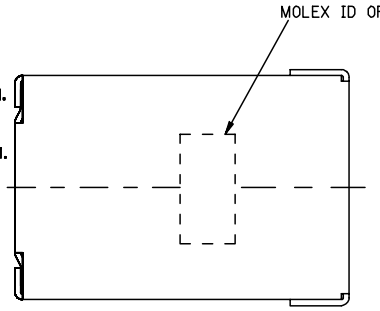

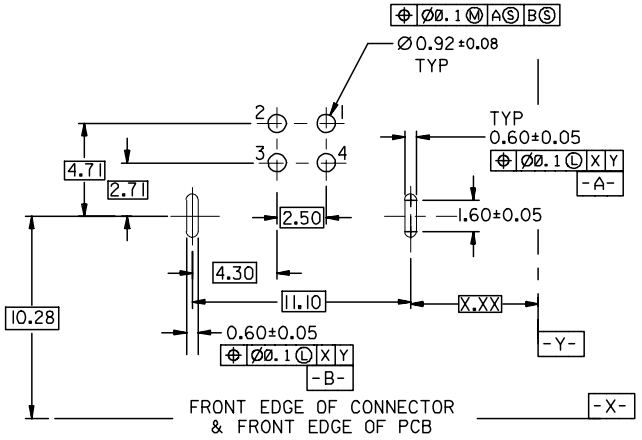

RECOMMENDED PCB LAYOUT

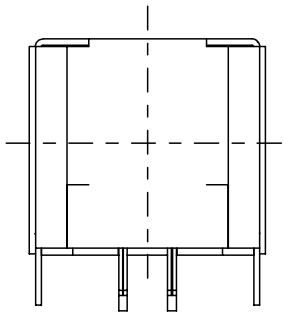

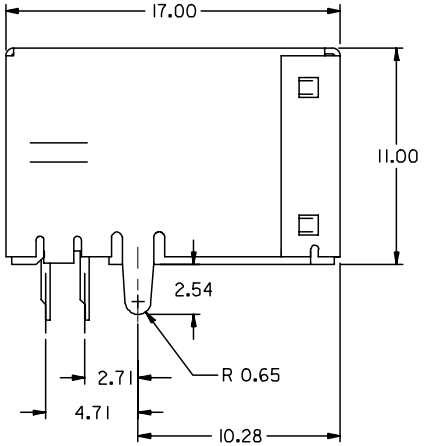

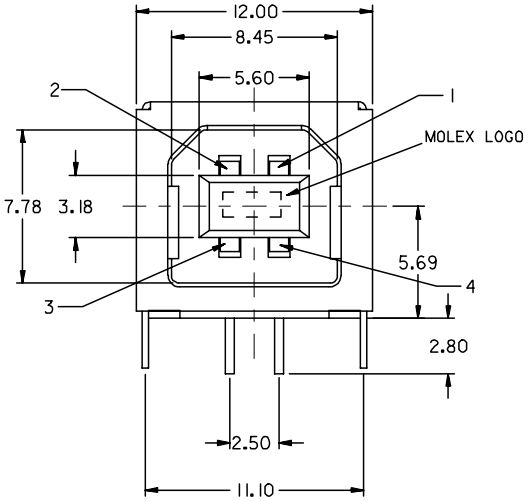

PART NUMBER LEGEND:

67068- 7051

LTR	REVISION RECORD	ECN	DR	DATE
A	NEW RELEASE FOR LEAD-FREE		DAVD HU	2004/11/5
REVISE ONLY ON CAD SYSTEM				

MATERIAL : SEE NOTES	MOLEX TAIWAN LTD. SHEET 4 OF 4
FINISH : SEE NOTES	
WIRE RANGE :	GENERAL TOLERANCES ANGLE : ± 3° DIM : ± .25/.010
INS. RANGE :	ENG. NO.: SD-67068-003 REV A
DRAWN BY 2004/11/5 DAVID HU / CHK'D BY	TITLE : HIGH TEMP.USB B TYPE CONNECTOR WITH STRAIGHT TAB (LEAD-FREE)
APPR'D BY / SCALE 4 : 1	

THIS DRAWING CONTAINS INFORMATION THAT IS PROPRIETARY TO MOLEX (FEML) AND SHOULD NOT BE USED WITHOUT WRITTEN PERMISSION

MXT , Sa - 13