molex
one company > a world of innovation

This document was generated on 02/26/2021

# PLEASE CHECK WWW.MOLEX.COM FOR LATEST PART INFORMATION

**Part Number:** 0622029820
**Status:** Active
**Overview:** Application Tooling
**Description:** Removal Tool for 2 by 8 Small Form-Factor Pluggable

**Documents:**
RoHS Certificate of Compliance (PDF)

**General**

| | |
|---|---|
| Product Family | Application Tooling |
| Series | 207123 |
| Comments | See Tooling Specification (PDF) Above |
| Function | Removal |
| Geographic Area | Global |
| Level of Automation | Manual |
| More Detailed Tech Information | applicationtooling@molex.com |
| Overview | Application Tooling |
| Product Name | PremiumGrade |
| Tool Type | Press-Fit Extraction Tool |
| UPC | 883906174378 |
| Warranty Disclaimer | CAUTION: Molex tooling crimp specifications are valid only when used with Molex terminals and tooling manufactured by Molex and sold by Molex or authorized distributors ("Molex Tooling"). When using tooling other than Molex Tooling with Molex specific connector systems listed in our ATS documents, the Molex tooling qualification does not apply and the responsibility for full qualification of the connector system is that of the customer. Molex accepts no liability for connector performance or tooling support where tooling other than Molex Tooling is used or where Molex Tooling is modified. |

**Physical**

| | |
|---|---|
| Net Weight | 2548.610/g |

**Material Info**

**Reference - Drawing Numbers**

| | |
|---|---|
| Application Tooling Documents | ATS-622029820 |

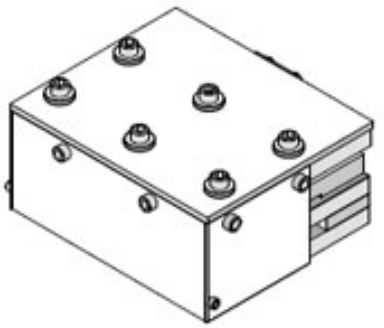

*Series image - Reference only*

**EU ELV**
**Not Relevant**

**EU RoHS** | **China RoHS**
**Not Reviewed**
**REACH SVHC**
Not Reviewed
**Halogen-Free Status**
**Not Relevant**
For more information, please visit Contact US

| | |
|---|---|
| China ROHS | Not Relevant |
| ELV | Not Relevant |
| RoHS Phthalates | Not Reviewed |

**Search Parts in this Series**
207123 Series

**Use With**
SFP Plus (SFP+) Cage 76352

| Application Tooling Description | FAQ Product # |
|---|---|
| zSFP+ Stacked Ganged Assembly with Elastomeric Gasket, 2-by-8 No Light Pipes, 320 Circuits | 1700718001 |
| zSFP+ Stacked Ganged Assembly with Elastomeric Gasket, 2-by-8 with 4 Light Pipes, 320 Circuits | 1700718011 |
| zSFP+ Stacked Ganged Assembly with Elastomeric Gasket, 2-by-8 with Inner Light Pipes, 320 Circuits | 1700718012 |

| | |
|---|---|
| zSFP+ Stacked Ganged Assembly with Elastomeric Gasket, 2-by-8 with Outer Down/Up Light Pipes, 320 Circuits | 1700718013 |

This document was generated on 02/26/2021
**PLEASE CHECK WWW.MOLEX.COM FOR LATEST PART INFORMATION**