

060152MA Series

Match with 060135MA

Specifications:

- **Insulator Material** : Black Thermo Plastic UL94V-O
- **Operating Type Range** : -40˚C TO +105˚C
- **Terminal Material** : Pho. Bronze
- **Platings** : Contact Gold Plated
- **Max. Current Rating** : 1.0A
- **Max. Voltage Rating** : 200V AC
- **Dielectric Strength** : 500V AC For 60 Seconds

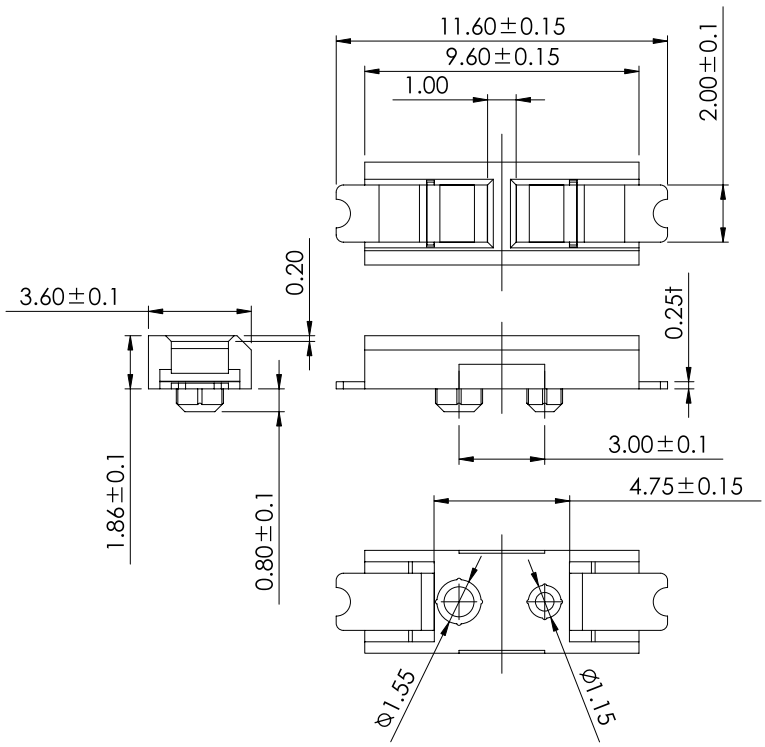

Order Information

060152MA002□□00ZR
1 2 3 4 5

1. 'A' : Straight SMT Type
2. No. of pins.
3. Plating
4. Color 'Z' : Black
5. Package
   'R' : Reel Package With Cap

Reference Page 11

Recommended P.C.B Layout

