SHEET 1 OF 1

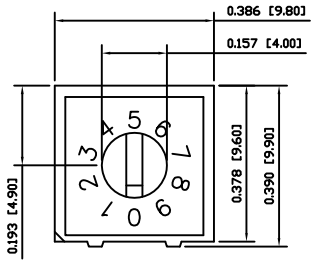

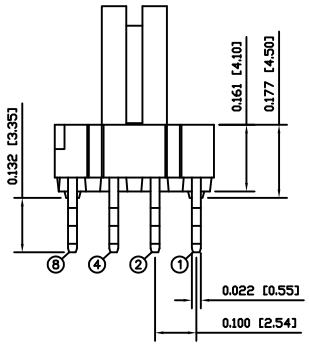

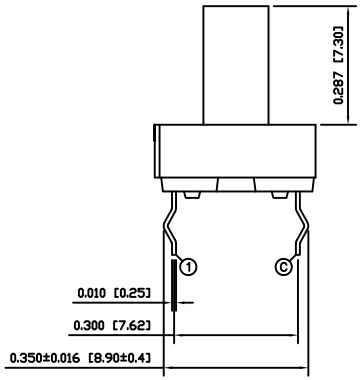

PACKAGING

PACKAGING TYPE:
Tube

TUBE QUANTITY:
48 Pieces

SCHEMATIC

POSITION	TERMINAL 1	2	4	8
0				
1	●			
2		●		
3	●	●		
4			●	
5	●		●	
6		●	●	
7	●	●	●	
8				●
9	●			●

● CLOSED (Connected to C)

SPECIFICATIONS

FUNCTION:
1P10T

RATINGS:
Switching: 25mA 24VDC
Steady: 100mA 50VDC

OPERATING FORCE:
400gfcm

CONTACT RESISTANCE:
Initial: 100mΩ Max.
After Life: 200mΩ Max.

INSULATION RESISTANCE:
100MΩ Min. at 250VDC

DIELECTRIC STRENGTH:
250VAC For 1 Minute

CAPACITANCE:
5pF Max.

SHOCK RESISTANCE:
Mil-Std. 202F, Method 213B
Gravity: 50G, 11msec.
Direction: 6 Sides
Times: 3 Each Direction
High Reliability

VIBRATION RESISTANCE:
Mil-Std. 202F, Method 201A
Frequency: 10-55-10Hz/1 Minute
Direction: X, Y, Z
Time: 2 Hours Each Direction
High Reliability

ELECTRICAL LIFE:
20,000 Steps

TEMPERATURE:
Storage: -40°C to 85°C
Operation: -25°C to 80°C

APPROVALS:
RoHS COMPLIANT **LEAD FREE** PROCESS COMPATIBLE

COLORS

BODY:
Black

ACTUATOR:
White

MARKING COLOR:
White

MATERIALS

BASE:
Polyamide 9T (PA9T), UL94 V-0

COVER:
Polyamide 9T (PA9T), UL94 V-0

ACTUATOR:
Liquid Crystal Polymer (LCP), UL94 V-0

SPRINGS:
Stainless Steel

CONTACTS:
Gold Over Nickel Plated Phosphor Bronze

TERMINALS:
Gold Over Nickel Plated Brass

SUGGESTED PCB LAYOUT

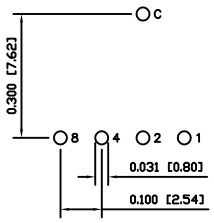

ACTUATOR	A	09/11/16	CAB
BODY	B	11/04/27	CAB
MATERIALS	A	09/11/16	CAB
PACKAGING	A	09/11/16	CAB
SPECIFICATIONS	B	10/04/07	CAB
REFERANCE	REV.	DATE	BY

THE INFORMATION CONTAINED IN THIS DOCUMENT IS PROPRIETARY TO E-SWITCH AND IS NOT TO BE COPIED OR TRANSFERRED

REV.	DESCRIPTION	PCR	DATE	DRAWN BY
C	CORRECTED TERMINAL NUMBERING	19887	11/04/27	CAB
B	INCREASED OPERATING FORCE	19005	10/04/07	CAB
A	INITIAL RELEASE	18915	10/03/18	CAB

DIMENSIONS: INCHES [MILLIMETERS]
GENERAL TOLERANCES: ±0.008 [±0.2] / ±1°
SCALE: DRAWING NOT TO SCALE
PROJECTION:

E•SWITCH® | LAMB™ INDUSTRIES

TITLE: DR4NH-10R-B

ITEM NUMBER: 06-DR4NH10RB
DATE: APRIL 27, 2011
REVISION: C