Part Number: 06-02-2030
Status: Active
Overview: Flat Blade
Description: Flat Blade Appliance Water Valve Crimp Housing, 3 Circuit

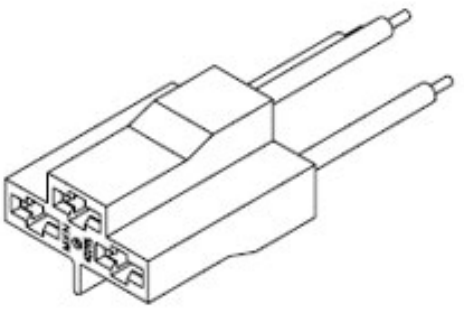

Series
image - Reference only

Documents:
3D Model
Drawing (PDF)
RoHS Certificate of Compliance (PDF)

Agency Certification

CSA	LR19980
UL	E29179

General

Product Family	Crimp Housings
Series	42295
Application	Power
Overview	Flat Blade
Product Name	Flat Blade
UPC	800755575620

Physical

Circuits (maximum)	3
Color - Resin	Natural
Flammability	94V-0
Gender	Female
Glow-Wire Compliant	No
Keying to Mating Part	Yes
Lock to Mating Part	None
Material - Resin	Nylon
Net Weight	4.010/g
Number of Rows	2
Packaging Type	Bag
Panel Mount	No
Pitch - Mating Interface	7.54mm
Pitch - Termination Interface	7.54mm
Stackable	No
Temperature Range - Operating	-40°C to +75°C

Material Info

Old Part Number	42295-1

Reference - Drawing Numbers

Sales Drawing	SD-42295-1

EU RoHS
ELV and RoHS Compliant
REACH SVHC
Contains SVHC: No
Low-Halogen Status
Low-Halogen

China RoHS

Need more information on product environmental compliance?

Email productcompliance@molex.com
For a multiple part number RoHS Certificate of Compliance, click here

Please visit the Contact Us section for any non-product compliance questions.

Search Parts in this Series
42295Series

Mates With
Appliance Water Valve

Use With
41422