LED SPECIFICATION

Part No.: 05W580BBC



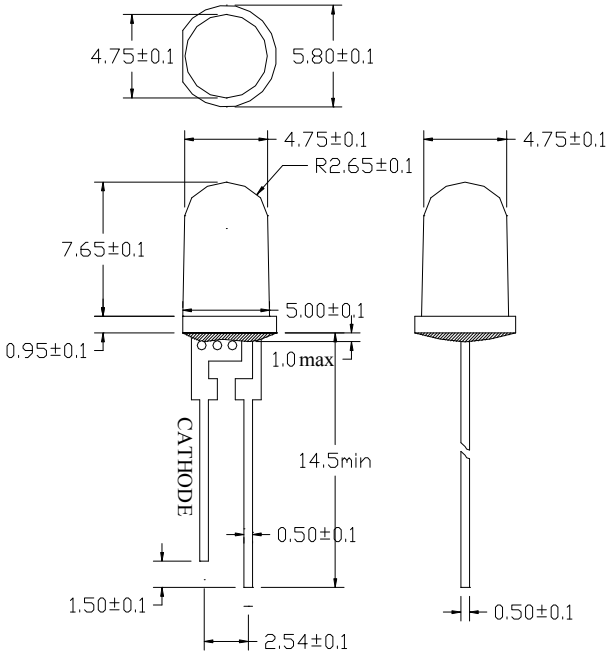

Features:

- Single color
- High bright output
- Medium power consumption
- High reliability and long life

Descriptions:

- Dice material: GaInN
- Emitting Color: Super Bright Blue
- Device Outline: Φ5mm Round Type
- Lens Type: Water Clear

NOTE:

- All dimensions are millimetres.
- Tolerance is +/-0.25mmunless otherivise noted

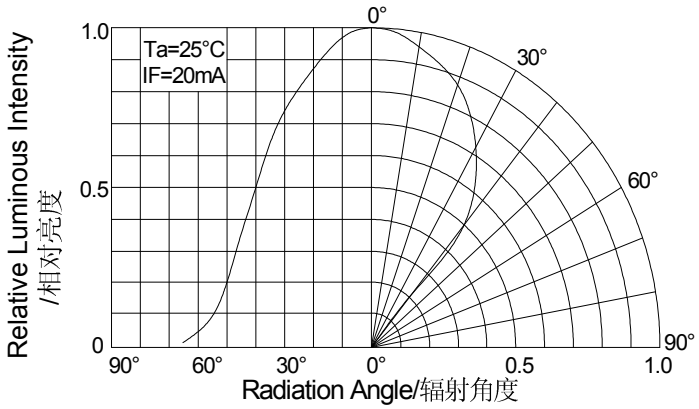

LED SPECIFICATION

Part No.: 05W580BBC

Absolute maximum ratings（Ta = 25℃）

Parameter	Symbol	Test Condition	Value		Unit
			Min.	Max.	
Reverse Voltage	VR	IR = 30μA	5	--	V
Forward Current	IF	----	----	100	mA
Power Dissipation	Pd	----	----	0.5	W
Pulse Current	Ipeak	Duty=0.1mS，1kHz	----	200	mA
Operating Temperature	Topr	----	-20	+85	℃
Storage Temperature	Tstr	----	-25	+100	℃

Electrical and optical characteristics （Ta = 25℃）

Parameter	Symbol	Test Condition	Value			Unit
			Min.	Typ.	Max.	
Forward Voltage	VF	IF = 100mA	3.4	----	4	V
Reverse Current	IR	VR = 5V	----	----	30	μA
Luminous Flux	Φv	IF = 100mA	2.8	----	4.7	lm
Color Temperature	CCT	IF = 100mA	----	----	----	K
Viewing Angle	2θ1/2	IF = 100mA	----	85	----	Deg.

Luminous Flux Bins（Ta = 25℃） Unit:lm

Bin	F	G	H	J	K	L
Min	1.3	1.7	2.2	2.8	3.6	4.7
Max	1.7	2.2	2.8	3.6	4.7	6.0

Part No.：05W580BBC

Typical electrical/optical characteristic curves：

Fig.1 正向电流 Vs. 正向电压

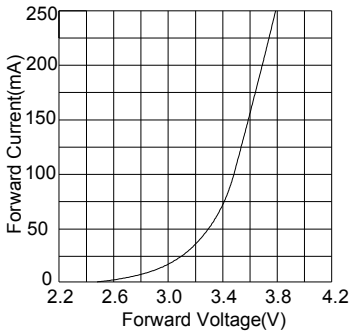

Fig.2 相对亮度 Vs. 正向电流

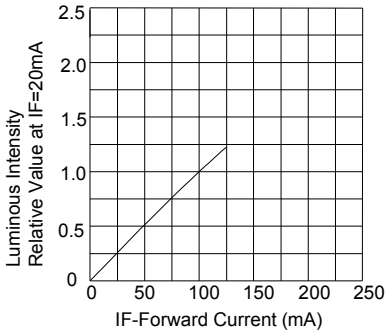

Fig.3 正向电流 Vs. 环境温度

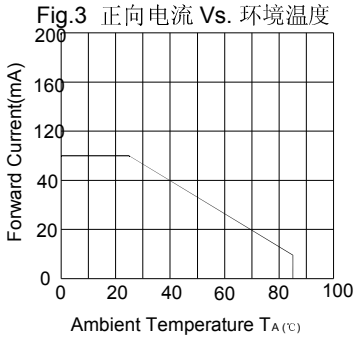

Fig.4 相对亮度 Vs. 环境温度

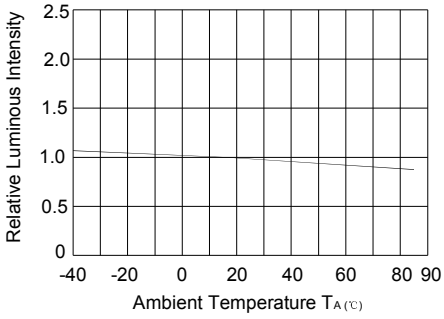

Fig.5 相对亮度 Vs. 波长

