molex
one company > a world of innovation

This document was generated on 06/01/2010

PLEASE CHECK WWW.MOLEX.COM FOR LATEST PART INFORMATION

Part Number: 0593209028
Status: Active
Overview: minihmc
Description: HMC™ Rectangular Industrial Male Terminal, Multi-Module Type, Reel

Documents:
3D Model
Drawing (PDF)
RoHS Certificate of Compliance (PDF)

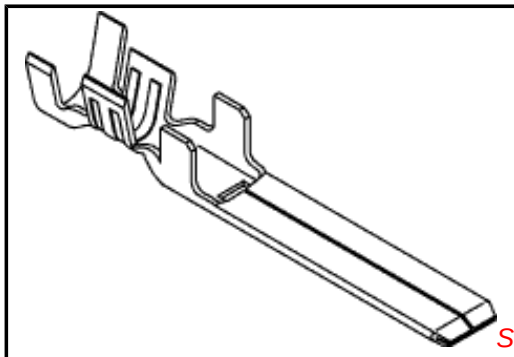

Series image - Reference only

General

Product Family	Crimp Terminals
Series	59320
Crimp Quality Equipment	Yes
Overview	minihmc
Product Name	HMC™

Physical

Durability (mating cycles max)	50
Gender	Plug
Material - Metal	Brass
Material - Plating Mating	Gold
Material - Plating Termination	Tin
Packaging Type	Reel
Plating min: Mating (µin)	10
Plating min: Mating (µm)	0.25
Plating min: Termination (µin)	40
Plating min: Termination (µm)	1
Termination Interface: Style	Crimp or Compression
Wire Insulation Diameter	2.20-2.70mm (.087-.106")
Wire Size AWG	16
Wire Size mm²	N/A

Electrical

Current - Maximum per Contact	13A
Voltage - Maximum	250V AC / 300V DC

Material Info

Reference - Drawing Numbers

Product Specification	RPS-58719-008
Sales Drawing	SD-59320-002

EU RoHS
ELV and RoHS Compliant
REACH SVHC
Not Reviewed
Halogen-Free Status
Not Reviewed

China RoHS

Need more information on product environmental compliance?

Email productcompliance@molex.com
For a multiple part number RoHS Certificate of Compliance, click here

Please visit the Contact Us section for any non-product compliance questions.

Search Parts in this Series
59320Series

Use With
51194 Housing

Application Tooling | **FAQ**

Tooling specifications and manuals are found by selecting the products below. Crimp Height Specifications are then contained in the Application Tooling Specification document.

Japan

Description	Product #
Applicator for M211A Bench Press, 14-18 AWG, for 50637/50638/59319/59320 Crimp Terminal	0573553000
Large Applicator For 5-Ton Press	0573553200

This document was generated on 06/01/2010

PLEASE CHECK WWW.MOLEX.COM FOR LATEST PART INFORMATION

DWG. NO. SD-59320-002

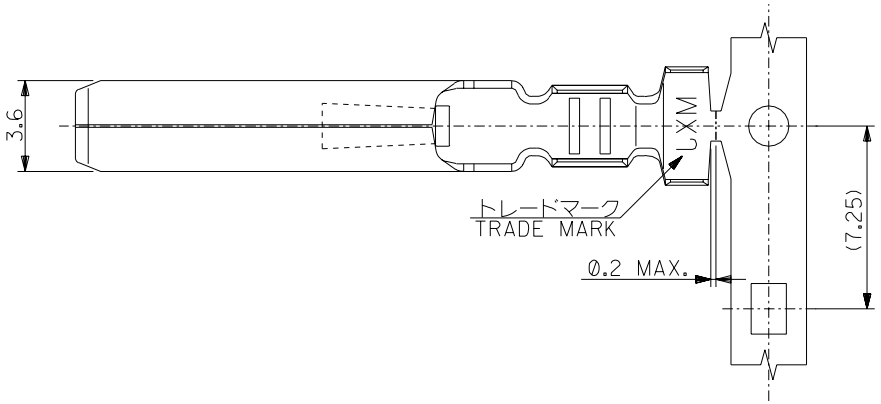

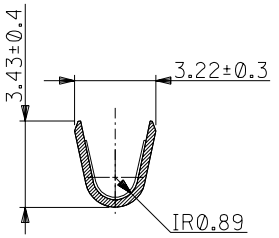

A-A

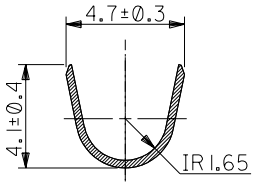

B-B

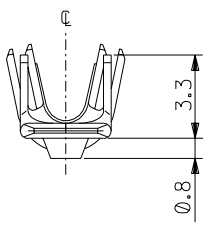

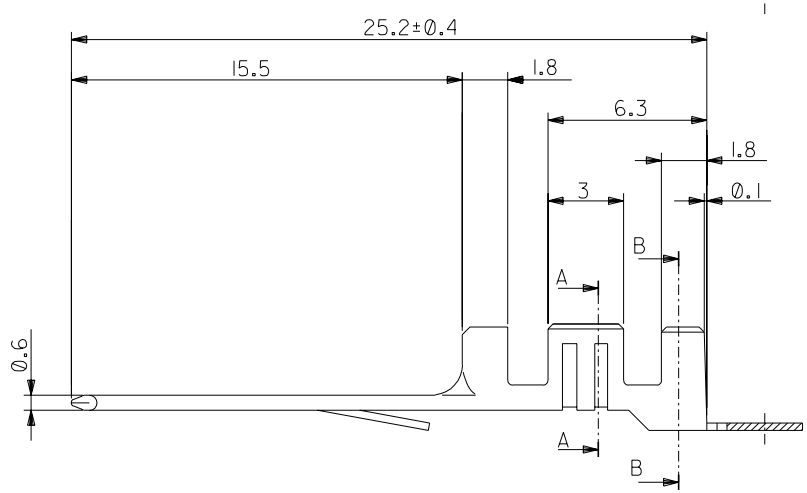

注)
NOTES;

1. 材質
   MATERIAL
   黄銅 (板厚：0. 3)
   BRASS (THICKNESS : 0.3)
2. メッキ仕様
   TERMINAL PLATING
   接点部 ： 金メッキ 0.25 μm MIN.
   CONTACT AREA : GOLD 0.25 MICROMETER MIN.
   圧着部 ： 錫メッキ 1.0μm MIN.
   CRIMP AREA : TIN 1.0 MICROMETER MIN.
   下地メッキ ： ニッケルメッキ 2.0 μm MIN.
   UNDER PLATE : NICKEL 2.0 MICROMETER MIN.
3. 適用電線範囲：UL2517 , AWG #16
   APPLICABLE WIRE RANGE : UL2517 , AWG #16
4. 被覆外径 ：ø2.2～ø2.7
   INSULATION EXTERNAL DIA : ø2.2～ø2.7
5. 適用ハウジングアッセンブリ： 51194 シリーズ
   APPLICABLE HOUSING ASS'Y : 51194 SERIES
6. 本製品は59320－＊＊90の鉛フリー品である。
   THIS PRODUCT IS LEAD FREE OF 59320-**90.

バラ状 LOOSE	59320-9128	59320-**28
連鎖状 CHAIN	59320-9028	
端子形状 TERMINAL CONFIGURATION	MATERIAL No.	MODEL NO.

DO NOT SCALE DRAWING

EC NO. DRWN: CH'K: APPR:	EC NO. DRWN: CH'K: APPR:	EC NO. DRWN: CH'K: APPR:	EC NO. DRWN: CH'K: APPR:	RELEASED EC NO. J2004-3411 DRWN: Y.WADA '04/03/29 CH'K: M.SASAO '04/03/29 APPR: M.SASAO '04/03/29	DESCRIPTION
				0	REV

MATERIAL 材料 —#—
FINISH 仕上げ —#—
WIRE RANGE 適用電線範囲 —#—
INS. RANGE 被覆外径 —#—

GENERAL TOLERANCES: (UNLESS SPECIFIED) 一般公差

10 UNDER 未満	±0.2
10 OVER 以上 30 UNDER 未満	±0.25
30 OVER 以上	±0.3
ANGLE 角度	±3°

SCALE 1:1 | DESIGN UNITS ☒mm ☐INCH | THIRD ANGLE PROJECTION | DIMENSIONS: ☐mm/INCH ☐INCH/mm ☒mm ONLY | SHT | REV | REVISE ON CAD ONLY

DRAWN BY & DATE Y.WADA '04/03/29
CHECKED BY & DATE M.SASAO '04/03/29
APPROVED BY & DATE M.SASAO '04/03/29

TITLE: POWER CONN. REC. CRIMP TERMINAL -LEAD FREE-

molex MOLEX INCORPORATED

CAD FILENAME SD-59320-002.S01 | MATERIAL NO. SEE CHART | DRAWING NO. SD-59320-002 | SHEET NO. 1 OF 1

THIS DRAWING CONTAINS INFORMATION THAT IS PROPRIETARY TO MOLEX INCORPORATED AND SHOULD NOT BE USED WITHOUT WRITTEN PERMISSION.

SIZE B

EN-02J(097) MXJ-54