molex
one company > a world of innovation

This document was generated on 05/19/2010

PLEASE CHECK WWW.MOLEX.COM FOR LATEST PART INFORMATION

Part Number: 0561250028
Status: Active
Overview: mtc_multi_terminal_connector
Description: 5.00 and 7.50mm (.197 and .295") Pitch Crimp Terminal 56125, Female, 14-18 AWG, Lead-Free, Reel

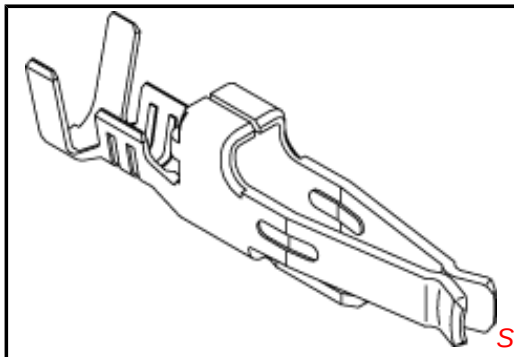

Series image - Reference only

Documents:

Drawing (PDF)
Product Specification PS-51240-005 (PDF)
Product Specification PS-51241-005 (PDF)
RoHS Certificate of Compliance (PDF)

General

Product Family	Crimp Terminals
Series	56125
Crimp Quality Equipment	Yes
Overview	mtc_multi_terminal_connector
Product Name	MTC™

Physical

Gender	Female
Material - Metal	Copper
Material - Plating Mating	Tin
Material - Plating Termination	Tin
Packaging Type	Reel
Plating min: Mating (µin)	120
Plating min: Mating (µm)	3.00
Plating min: Termination (µin)	120
Plating min: Termination (µm)	3
Termination Interface: Style	Crimp or Compression
Wire Insulation Diameter	3.40mm (.134") max., 3.80mm (.150") max.
Wire Size AWG	14, 16, 18
Wire Size mm²	N/A

Material Info

Reference - Drawing Numbers

Product Specification	PS-51240-005, PS-51241-005, RPS-51240-006, RPS-51241-007
Sales Drawing	SD-56125-004

EU RoHS
ELV and RoHS Compliant
REACH SVHC
Not Reviewed
Halogen-Free Status
Not Reviewed

China RoHS

Need more information on product environmental compliance?

Email productcompliance@molex.com
For a multiple part number RoHS Certificate of Compliance, click here

Please visit the Contact Us section for any non-product compliance questions.

Search Parts in this Series
56125Series

Application Tooling | **FAQ**

Tooling specifications and manuals are found by selecting the products below. Crimp Height Specifications are then contained in the Application Tooling Specification document.

Global

Description	Product #
Extraction Tool for MTC (Multi Terminal Connector) Female Terminal, 14-18 AWG	0638138600

Japan

Description	Product #
Side-Feed Applicator for Full-Auto Machine	0573493200
Extraction Tool	0573496000

This document was generated on 05/19/2010

PLEASE CHECK WWW.MOLEX.COM FOR LATEST PART INFORMATION

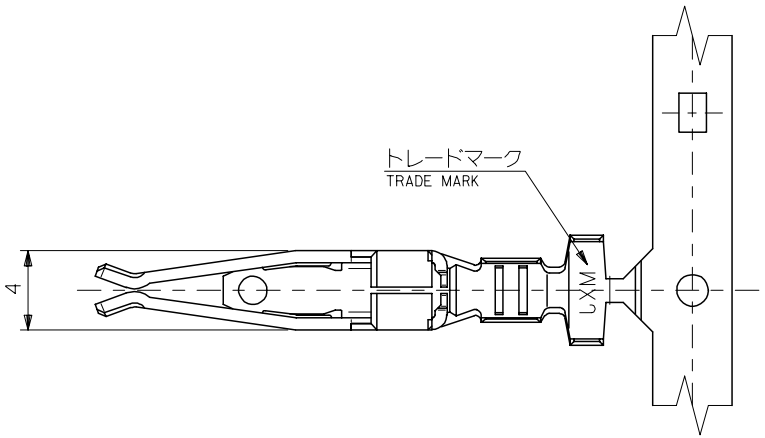

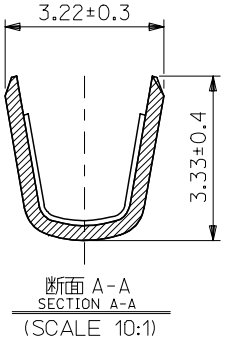

断面 A-A
SECTION A-A
(SCALE 10:1)

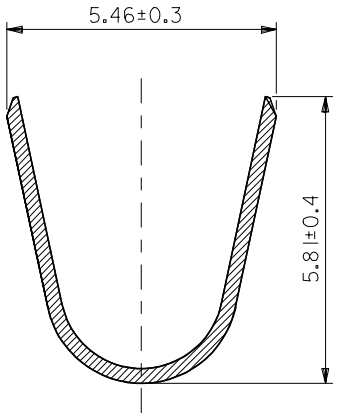

断面 B-B
SECTION B-B
(SCALE 10:1)

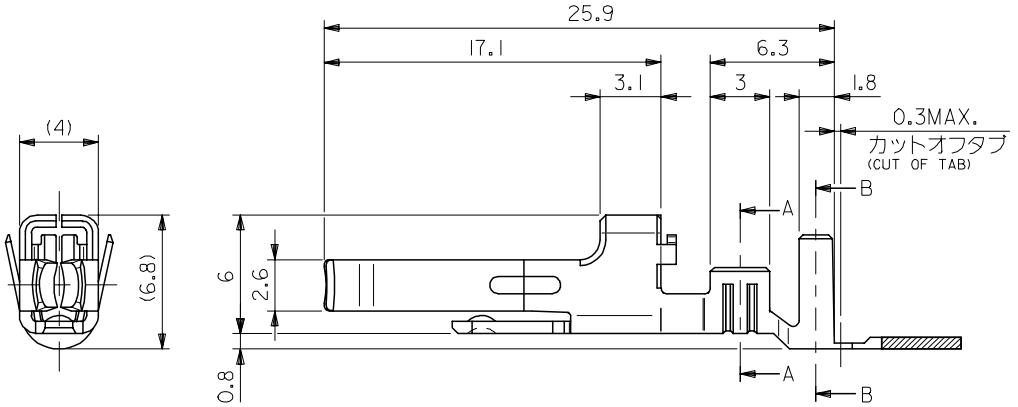

注記)
NOTES:

1. 材質：銅合金
   MATERIAL : COPPER ALLOY
2. メッキ仕様
   PLATING
   錫メッキ：3μm 以上
   TIN PLATING : 3 MICROMETER MIN.
   ニッケルメッキ：1μm 以上（下地メッキ）
   NICKEL PLATING : 1 MICROMETER MIN. (UNDER PLATING)
3. 適用電線及び適合ハウジング
   APPLICABLE WIRE AND APPLICABLE HOUSING

適合ハウジング APPLICABLE HOUSING / 適用電線 APPLICABLE WIRE	51240-**** (5mm PITCH)	51241-**** (7.5mm PITCH)
範囲 RANGE	AWG#16～#18	AWG#14～#18
被覆外径(UL1015相当) INS. DIA. (UL1015 CORRESPONDING)	ø3.4 MAX.	ø3.8 MAX.

4. 本製品は 56125-0018/0118 の鉛フリー品である。
   THIS PRODUCT IS LEAD FREE OF 56125-0018/0118.

連鎖状 CHAIN	56125-0028
バラ状 LOOSE	56125-0128
端子形状 FORM	製品番号 MATERIAL NO.

RELEASED
EC NO: J2005-2082
DRWN:NAIDA 2005/01/20
CH'KD:KTOJO 2005/01/24
APPR:NUKITA 2005/01/28
DESCRIPTION
REV 0

GENERAL TOLERANCES (UNLESS SPECIFIED)

10 UNDER	±0.2
10 OVER 30 UNDER	±0.25
30 OVER	±0.3
ANGULAR	±3 °

DRAFT WHERE APPLICABLE MUST REMAIN WITHIN DIMENSIONS

DIMENSION STYLE: MM ONLY
SCALE: 4:1
DESIGN UNITS: METRIC
THIRD ANGLE PROJECTION

DRAWN BY: N.AIDA DATE: '05/01/20
CHECKED BY: K.TOJO DATE: '05/01/20
APPROVED BY: N.UKITA DATE: '05/01/20

TITLE: MTC(MULTI TERMINAL CONN) REC. CRIMP TERM. -LEAD FREE-

MOLEX INCORPORATED

MATERIAL NO.: SEE CHART
DOCUMENT NO.: SD-56125-004
SHEET NO.: 1 OF 1

SIZE A3

THIS DRAWING CONTAINS INFORMATION THAT IS PROPRIETARY TO MOLEX INCORPORATED AND SHOULD NOT BE USED WITHOUT WRITTEN PERMISSION