molex
one company > a world of innovation

This document was generated on 04/16/2010

PLEASE CHECK WWW.MOLEX.COM FOR LATEST PART INFORMATION

Part Number: 0532590729
Status: Active
Description: 3.50mm (.138") Pitch Header, Right Angle, Lead-free, 7 Circuits, Brass (CuZn) Contact

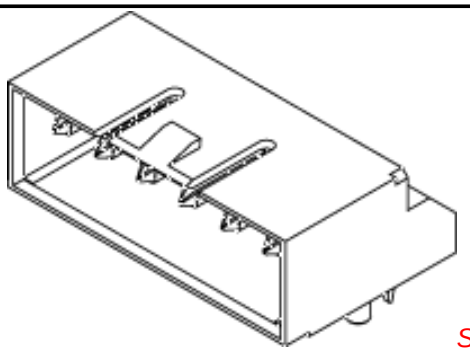

Series image - Reference only

Documents:

3D Model
Drawing (PDF)
Product Specification PS-51067-019 (PDF)
RoHS Certificate of Compliance (PDF)

Agency Certification

CSA	LR19980
UL	E29179

General

Product Family	PCB Headers
Series	53259
Application	Wire-to-Board
Product Name	N/A

Physical

Breakaway	No
Circuits (Loaded)	7
Circuits (maximum)	7
Durability (mating cycles max)	30
First Mate / Last Break	No
Flammability	94V-0
Glow-Wire Compliant	No
Guide to Mating Part	Yes
Keying to Mating Part	Yes
Lock to Mating Part	Yes
Material - Metal	Brass
Material - Plating Mating	Tin
Material - Plating Termination	Tin
Number of Rows	1
Orientation	Right Angle
PC Tail Length (in)	0.138 In
PC Tail Length (mm)	3.50 mm
PCB Locator	Yes
PCB Retention	None
PCB Thickness Recommended (in)	0.062 In
PCB Thickness Recommended (mm)	1.60 mm
Packaging Type	Tray
Pitch - Mating Interface (in)	0.138 In
Pitch - Mating Interface (mm)	3.50 mm
Polarized to PCB	Yes
Shrouded	Fully
Stackable	No
Temperature Range - Operating	-40°C to +105°C
Termination Interface: Style	Through Hole

Electrical

Current - Maximum per Contact	5.5A
Voltage - Maximum	250V

Material Info

Reference - Drawing Numbers

EU RoHS
ELV and RoHS Compliant
REACH SVHC
Not Reviewed
Halogen-Free Status
Not Halogen-Free

China RoHS

Need more information on product environmental compliance?

Email productcompliance@molex.com
For a multiple part number RoHS Certificate of Compliance, click here

Please visit the Contact Us section for any non-product compliance questions.

Search Parts in this Series
53259Series

Mates With
51067 Crimp Housing. 50217 Crimp Terminal

Product Specification	PS-51067-019, RPS-51067-019, RPS-51067-021, RPS-51067-025, RPS-51067-037, RPS-51067-041
Sales Drawing	SD-53259-003

This document was generated on 04/16/2010

PLEASE CHECK WWW.MOLEX.COM FOR LATEST PART INFORMATION

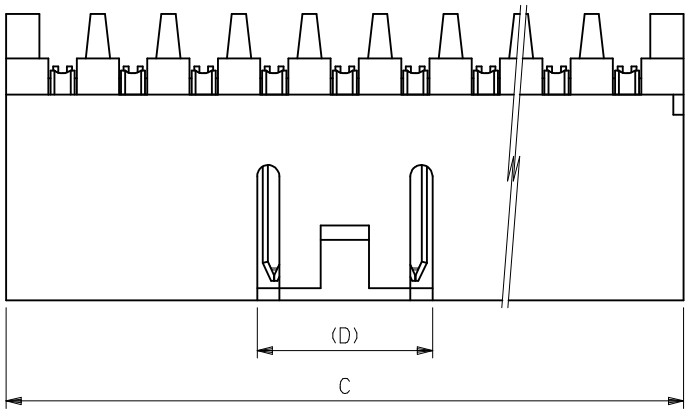

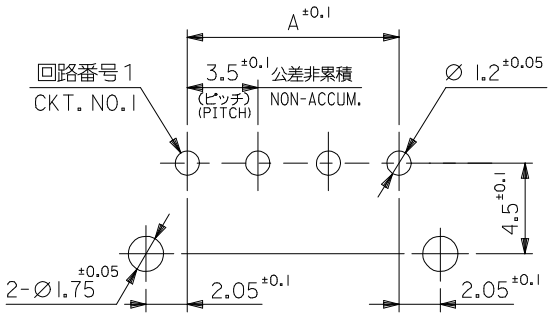

基板取付穴推奨寸法（参考）（t＝1．6）
RECOMMENDED P.C. BOARD HOLE DIM. (REF.)

注記 NOTES

1. 嵌合相手：51067 シリーズ
   MATE WITH : 51067 SERIES
2. 材質
   MATERIAL
   ウエハー：PBTP（ガラス15%入り）、UL94V-0
   WAFER : PBTP (G.F 15%), UL94V-0
   ピン　：黄銅、ニッケル下地　錫メッキ（t=0.254）
   PIN : BRASS
   TIN OVER NICKEL PLATING (t=0.254)
3. 本製品は　53259-＊＊20　の鉛フリー品である。
   THIS PRODUCT IS LEAD FREE OF 53259-**20.
4. メッキ仕様
   TERMINAL PLATING
   表面メッキ　：　スズメッキ　1μm MIN.
   SURFACE PLATE : TIN　1μm MIN.
   下地メッキ　：　ニッケルメッキ　1μm MIN.
   UNDER PLATE : NICKEL 1μm MIN.

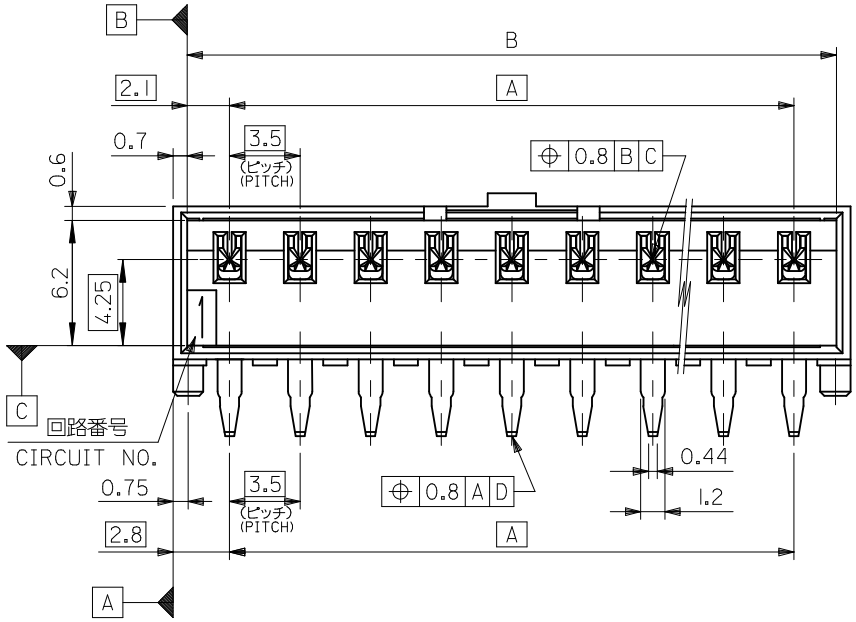

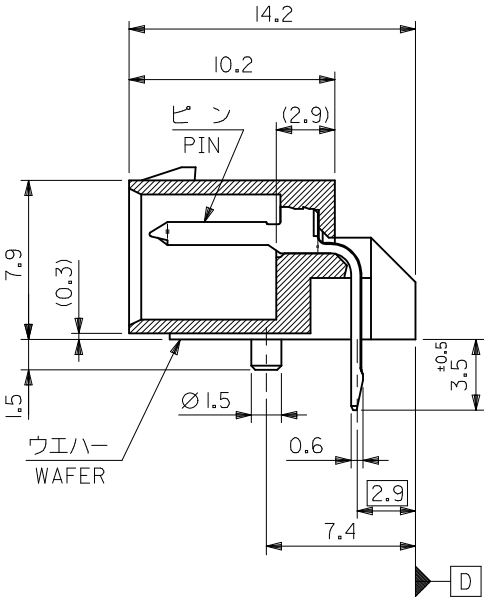

(D)	C	B	A	TRAY PACKAGE ORDER No. オーダー番号	CKT. 極数
8.7	54.6	53.2	49.0	53259-1529	15
	51.1	49.7	45.5	-1429	14
	47.6	46.2	42.0	-1329	13
	44.1	42.7	38.5	-1229	12
	40.6	39.2	35.0	-1129	11
	37.1	35.7	31.5	-1029	10
	33.6	32.2	28.0	-0929	9
	30.1	28.7	24.5	-0829	8
	26.6	25.2	21.0	-0729	7
	23.1	21.7	17.5	-0629	6
	19.6	18.2	14.0	-0529	5
8.7	16.1	14.7	10.5	-0429	4
6.1	12.6	11.2	7.0	-0329	3
6.1	9.1	7.7	3.5	53259-0229	2

MODEL NO. 53259-**29

MATERIAL
材料
注記参照
SEE NOTES

REVISED
EC NO: J2010-0817 2009/10/22
DRWN:SKUROSE 2009/10/22
CH'KD:KASAKAWA 2009/10/22
APPR:NUKITA 2009/10/22
DESCRIPTION
REV
D

GENERAL TOLERANCES (UNLESS SPECIFIED)

10 UNDER	±0.2
10 OVER 30 UNDER	±0.25
30 OVER	±0.3
ANGULAR	±3 °

DRAFT WHERE APPLICABLE MUST REMAIN WITHIN DIMENSIONS

DIMENSION STYLE: MM ONLY	SCALE: 4:1	DESIGN UNITS: METRIC	THIRD ANGLE PROJECTION
DRAWN BY: T.UENO DATE: 2004/04/22	TITLE: 3.5 W/B CONN W.A. R/A -LEAD FREE-		
CHECKED BY: M.SASAO DATE: 2004/04/22			
APPROVED BY: M.SASAO DATE: 2004/04/22	MOLEX INCORPORATED		
MATERIAL NO.: SEE TABLE	DOCUMENT NO.: SD-53259-003	SHEET NO.: 1 OF 1	

SIZE A3

THIS DRAWING CONTAINS INFORMATION THAT IS PROPRIETARY TO MOLEX INCORPORATED AND SHOULD NOT BE USED WITHOUT WRITTEN PERMISSION